[Note: The Benefits and Obligations Contract is being provided as a final draft, and the draft remains subject to limited further revision and negotiation among the parties involved.]

Draft Sites Reservoir Benefits & Obligations Contract

Among

Participants, Acquirer and Sites Authority

Dated as of [_____], 2026

[Board Report Draft: ~~September 15~~October 12, 2026]

TABLE OF CONTENTS

Page

SECTION 1. CONTRACT APPLICABILITY; DEFINITIONS AND INTERPRETATION 4

SECTION 2. TERM; PRIOR AGREEMENTS; RESERVOIR MANAGEMENT BOARD; PAYMENT APPENDICES 7

SECTION 3. PROVISIONS APPLICABLE TO DEVELOPMENT, CONSTRUCTION AND OWNERSHIP 9

SECTION 4. PROVISIONS APPLICABLE TO OPERATIONS AND MAINTENANCE 10

SECTION 5. FINANCING OF THE PROJECT 16

SECTION 6. PAYMENT OF PROJECT COSTS 19

SECTION 7. SITES AUTHORITY FINANCIAL COVENANTS 25

SECTION 8. LEASING, SALE, TRANSFER AND ASSIGNMENT OF CAPACITY INTERESTS AND SALES OF WATER 26

SECTION 9. MODIFICATIONS FOR CAPITAL IMPROVEMENTS 32

SECTION 10. DEFAULT 32

SECTION 11. TERMINATION 35

SECTION 12. DISPUTE RESOLUTION 37

SECTION 13. LIABILITY 38

SECTION 14. INSURANCE 39

SECTION 15. MISCELLANEOUS 39

15.1 Relationship of Parties 39
15.2 Severability 39
15.3 Notices 40
15.4 Other Agreements Not Prohibited 40
15.5 Assignment 40
15.6 Section Headings 41
15.7 Governing Law and Venue 41
15.8 Construction of Language 41
15.9 Successors 41
15.10 Enforcement 41
15.11 Integration 41
15.12 Amendment 41

15.13 Authorization and Opinion 42
15.14 Counterparts; Electronic Execution 42
15.15 Third-Party Beneficiaries 43
15.16 Advice of Counsel 43
15.17 Compliance with Laws and Financing Agreements 43

Appendix 1 Definitions
Appendix 2 Project Specific Information
Appendix 3 Form of Self-Funding Notice
Appendix 4 Form of Sites Financing Incurrence Notice
Appendix 5 Form of Participant Opinion Letter
Appendix 6 Form of Sites Authority Opinion Letter
Appendix 7 Payment Appendix
Appendix 8 Initial Sites Operations Plan
Appendix 9 Additional Terms for the Acquirer and SWP Participants

Draft Sites Reservoir Benefits & Obligations Contract Between the Sites Authority, each Participant in Appendix 2 and the Acquirer

This Sites Reservoir Benefits & Obligations Contract (this "**Contract**"), among the Participants listed in Appendix 2, the Acquirer and the Sites Project Authority ("**Sites Authority**"), sets forth the rights and obligations of the Parties with respect to the Project. Unless the context otherwise requires, capitalized acronyms, abbreviations and terms used in this Contract shall have the meanings given in Appendix 1.

RECITALS

A. The Sites Authority is a California Joint Powers Authority operating under and by virtue of Section 6500 et seq., of the California Government Code and formed in accordance with the Sites Authority JPA Agreement. The Sites Authority was established for the purpose of designing, constructing, owning, operating and maintaining the Project. The JPA Agreement together with the Phase 3-4-5 Bylaws are in full force and effect as of or prior to the date of this Contract.

B. The Project Facilities consist of Sites Owned Facilities and Partner Facilities.

C. Partner Facilities currently include facilities: (i) owned in whole or in part by Reclamation, the Glenn-Colusa Irrigation District and Reclamation District 108, and (ii) operated, maintained and/or repaired by the Tehama-Colusa Canal Authority, the Glenn-Colusa Irrigation District, and Reclamation District 108. Use of these Partner Facilities for Project purposes is subject at all times to Section 2.6 of the JPA Agreement, which prohibits the Sites Authority from entering into any agreements or otherwise taking any action that will, directly or indirectly, decrease, restrict, or in any manner alter, modify or limit water rights, water supplies or contractual entitlements to water of the Tehama-Colusa Canal Authority, the Glenn-Colusa Irrigation District, and Reclamation District 108 (and, in the case of the Tehama-Colusa Canal Authority, the water agencies it serves) or the operations of their Partner Facilities or any facilities they operate under contract without the express written consent of the Tehama-Colusa Canal Authority, the Glenn-Colusa Irrigation District, or Reclamation District 108, depending on which facilities are at issue.

D. In compliance with the California Environmental Quality Act ("**CEQA**") and its implementing guidelines, the Sites Authority released a Final Environmental Impact Report ("**Final EIR**") for the Project on November 2, 2023. The Sites Authority certified the Final EIR and approved the Project with Board Resolution 2023-02 at its November 17, 2023 meeting.

E. Subject to compliance with Applicable Law and Governmental Approvals (including CEQA and NEPA), the Sites Authority intends to (i) design and construct the Sites Owned Facilities and certain other facilities, (ii) own the Project Assets, excluding the Partner Facilities, (iii) operate and maintain the Sites Owned Facilities; and (iv) contract with certain entities for the use, operations and maintenance of and improvements to and conveyance through existing Partner Facilities, in each case, for the benefit of the Storage Partners and in accordance with this Contract.

F. The Sites Authority will grant each Storage Partner, and each Storage Partner will own a Base Facilities Capacity Interest. Each Participant will receive certain benefits and have certain obligations in accordance with this Contract. The Sites Authority will also grant to each Storage

Partner who elects to acquire Downstream Facilities Capacity Interest, and such Storage Partners shall own a Downstream Facilities Capacity Interest in accordance with this Contract.

G. The Sites Authority expects to obtain the Sites Water Right and will provide water service to the Participants in accordance with this Contract and in accordance with the direction of the Participants, consistent with Section 4.12 of this Contract.

H. DWR operates and maintains the State Water Project pursuant to the laws of the State of California, involving the development and conveyance of water supplies to water supply agencies throughout the State of California. DWR, as the Acquirer, will acquire Sites Water, and certain other benefits from the Project for the benefit of the SWP Participants as further described in Section 1.3 and Appendix 9 of this Contract, and will convey such acquired Sites Water through the State Water Project Facilities. Conveyance of Sites Water through the State Water Project Facilities is not covered by this Contract and will be addressed in separate agreements.

I. The Sites Authority intends to enter into certain agreements and contracts with State and Federal agencies pursuant to which the State and Reclamation will receive certain benefits (including water service) and have certain obligations related to the Project. These include the: (i) Reclamation Partnership Agreement; (ii) State and Federal Operations Agreement; (iii) Contracts for Administration of Public Benefits with State Agencies; (iv) Proposition 1 Water Storage Investment Program Funding Agreement with the California Water Commission; and (v) an Excess Capacity Agreement with Reclamation related to the Tehama-Colusa Canal.

J. The governance powers delegated to the Reservoir Management Board described in Section 4.12 of this Contract are a material benefit to the Participants and important to the Participants' decision to enter into this Contract and to commit to the investments described therein.

In consideration of the above Recitals and of the mutual promises and agreements contained in this Contract, the receipt and sufficiency of which are hereby acknowledged, the Parties agree as follows:

SECTION 1. CONTRACT APPLICABILITY; DEFINITIONS AND INTERPRETATION

1.1 Contract and Relationship with JPA Agreement

1.1.1 This Contract means the contractual relationship among the Parties:

(a) for Self-Funding Participants, constituted by:

(i) this Contract and all Appendices and Exhibits (excluding Section 5.3 and Appendix 7, except to the extent set out in Section 1.1.1(a)(iii));

(ii) Section 5.5 only to the extent that a Participant satisfies all or a portion of its Fixed Project Cost Funding Obligations through Self-Funding Participant Cash Payments, and then only for the term of any payments for Fixed Project Costs using proceeds from such Self-Funding Participant Cash Payments; and

(iii) the applicable payment appendix in Appendix 7A, Appendix 7B or Appendix 7C, identified for each Participant in the Project Specific Information; or

(b) for Financing Participants constituted by:

(i) this Contract and all Appendices and Exhibits (excluding Section 5.5 and Appendix 7 except to the extent set out in Section 1.1.1(a)(iii));

(ii) Section 5.3 only to the extent that it satisfies all or a portion of its Fixed Project Cost Funding Obligations through participation in a Sites Financing. With respect to a Financing Participant, the terms of Section 5.3 are not in effect at such times as there is no outstanding Sites Financing or the Sites Authority is not in the process of entering into a Sites Financing in which such Participant is or will be participating; and

(iii) the applicable payment appendix in Appendix 7A, Appendix 7B or Appendix 7C, identified for each Participant in the Project Specific Information.

(c) for the Acquirer and SWP Participants constituted by:

(i) Appendix 9 and those other provisions of this Contract consistent with Appendix 9. Notwithstanding Section 1.1.3, if there is an inconsistency or conflict between Appendix 9 and any other provision of this Contract, including other Appendices or exhibits, related to the rights, obligations or liabilities of the Acquirer or SWP Participants pursuant to this Contract, the provisions in Appendix 9 shall govern.

1.1.2 Where the Sites Authority or the Sites Authority Board is authorized to take actions with respect to the Project under this Contract, such authorization extends to any committee of the Sites Authority to the extent such responsibility for such actions has been lawfully delegated to such committee by the Sites Authority Bylaws or by an action of the Sites Authority Board, including to the Reservoir Management Board.

1.1.3 The Sites Authority Bylaws, the JPA Agreement and this Contract are to be interpreted in a manner that attempts to reconcile each with one another and affords the terms of each the fullest possible effect. In no event shall any such interpretation be predicated upon arbitrary, capricious, or unreasonable opinions or determinations. If there is an ambiguity, discrepancy, inconsistency or conflict between this Contract and the JPA Agreement or the Sites Authority Bylaws, then subject to Section 1.1.4, the following order of precedence from highest to lowest shall apply:

(a) this Contract;

(b) the Sites Authority Bylaws; and

(c) the JPA Agreement.

Notwithstanding anything in the foregoing to the contrary, in the event of any conflict between the JPA Agreement and either the Sites Authority Bylaws or this Contract, the JPA Agreement shall control as to Section 2.6 of the JPA Agreement, which provides as follows:

> "GCID, RD 108 and TCCA Operations: The Authority Members anticipate that the Project will be within or adjacent to GCID, RD 108, and/or TCCA districts with at least a portion of the conveyance of water into the Sites Reservoir to be accomplished by wheeling water through GCID's Main Canal, facilities that

currently exist or that might in the future be constructed within the boundaries of RD 108, and/or the Tehama-Colusa Canal. Notwithstanding anything to the contrary in the Bylaws, the Benefits & Obligations Contract, or any other Authority document, record or instrument concerning Project operations or governance, as the same may now exist or be amended from time to time, in no event shall the Authority have the power, except with the express written consent of GCID, RD 108 and/or TCCA, depending on which facilities are at issue, to enter into any agreements or otherwise take any action that will, directly or indirectly, decrease, restrict, or in any manner alter, modify or limit water rights, water supplies or contractual entitlements to water of GCID, RD 108 and/or TCCA (and, in the case of TCCA, the water agencies it serves) or the operations of their facilities or any facilities they operate under contract."

1.1.4 The Sites Authority Board, each Participant and the Acquirer shall undertake prompt and good faith efforts to eliminate any ambiguity, discrepancy, inconsistency or conflict that may exist or arise among the documents described in Section 1.1.3 in a manner consistent with the governance structure for the Project described in Section 4.12.

1.2 Interpretation

In this Contract, unless the context otherwise requires:

1.2.1 the singular includes the plural and vice versa;

1.2.2 references to statutes or regulations include all statutory or regulatory provisions consolidating, amending or replacing the statute or regulation referred to;

1.2.3 the words "including," "includes" and "include" are deemed to be followed by the words "without limitation";

1.2.4 a reference to a Section is a reference to a Section of this Contract;

1.2.5 a reference to any entity includes such entity's successors and permitted substitutes and assigns; and

1.2.6 words of any gender used in this Contract shall include each other gender where appropriate.

1.3 Role of DWR in Project

1.3.1 By entering into this Contract, DWR agrees to fulfill the role of the Acquirer for the benefit of the SWP Participants and receive the benefits and perform the obligations set forth in Appendix 9, provided that DWR's obligations under this Contract are limited such that DWR's only financial obligation to the Sites Authority or any other Party to this Contract pursuant to this Contract is to pay such sums to the Sites Authority as DWR receives from the SWP Participants in payment of that portion of their State Water Project annual charges traceable to this Contract as determined by DWR. Except where the Acquirer has a right, obligation or liability expressly stated in this Contract, including Appendix 9, DWR shall have no rights, obligations or liabilities under this Contract.

1.3.2 Deliveries of Sites Water to Participants and other entities may utilize the State Water Project conveyance facilities, subject to terms and conditions agreed upon by DWR and

such Participants or other entities and memorialized in other agreements. This Contract does not authorize or create a right to any such deliveries.

1.3.3 DWR and the Sites Authority may consider potential exchanges of water between the Sites Reservoir Project and the State Water Project, if agreed to by DWR pursuant to the terms and conditions of a separate Sites-SWP Exchange Agreement. This Contract does not authorize or create a right to any such exchanges.

1.3.4 DWR is an ex-officio member of the Sites Authority per California Water Code Section 79759, and this Contract does not affect or limit DWR's relevant statutory authorities.

1.3.5 DWR may participate in water rights proceedings involving the Project or enter into contracts with the Sites Authority, and this Contract does not affect or limit DWR's ability to engage in these activities, including taking positions that are adverse to or differ from the positions of the Sites Authority or any of the Participants; provided that such activities are not inconsistent with DWR's obligations under this Contract.

1.3.6 As a condition of funding under Proposition 1 in the California Water Code, the Sites Authority shall enter into Contracts for Administration of Public Benefits, including with DWR, provided certain requirements are satisfied. The responsibilities to enter into Contracts for Administration of Public Benefits are separate from DWR's role as an ex-officio member of the Sites Authority or DWR's role as the Acquirer under this Contract, and this Contract neither constitutes a Contracts for Administration of Public Benefits nor affects DWR's ability to enter into such agreements.

1.3.7 DWR has other responsibilities under State law for water management in the State, including relating to flood management and dam safety, that may relate to the Project, and this Contract does not affect or limit DWR's responsibilities under these laws.

1.4 Colusa County / Sites Authority MOU

This Contract incorporates the Colusa County / Sites Authority MOU in its entirety by reference.

SECTION 2. TERM; PRIOR AGREEMENTS; RESERVOIR MANAGEMENT BOARD; PAYMENT APPENDICES

2.1 Term

2.1.1 This Contract shall take effect upon:

(a) due execution of:

(i) the Contract by the Sites Authority, each of the Participants and the Acquirer; and

(ii) State and Federal Contracts by the Sites Authority, Reclamation and the State,

collectively representing 100% of the Base Facilities Capacity Interest;

(b) delivery to the Sites Authority by each Participant of (i) an opinion from an attorney or firm of attorneys in substantially the applicable form attached as

Appendix 5 and authorization as required by Section 15.13; and (ii) an executed version of the Payment Appendix applicable to such Participant in substantially the form attached as Appendix 7A, Appendix 7B or Appendix 7C (as applicable); and

(c) due execution by the Sites Authority of this Contract and delivery to such Participants of an opinion for the Sites Authority of special counsel and general counsel to the Sites Authority, in substantially the form of Appendix 6; and

(d) the California Water Commission makes a final award to the Sites Authority generally consistent with or greater than the Maximum Conditional Eligibility Determination.

2.1.2 This Contract shall:

(a) be dated and commence as of the signature and delivery date of the last executing and delivering Participant under Section 2.1.1 (the "**Effective Date**"); and

(b) as to each Participant and ~~the Acquirer, and~~ subject to the terms and conditions of the Sites Authority Bylaws and this Contract, continue for so long as ~~each of~~ that Participant and the Sites Authority continue to have their obligations under this Contract.

2.1.3 Section 1, Section 2, Section 3.4, Section 3.5, Section 5, Section 6, Section 7, Section 8, Section 9, Section 10, Section 11, Section 12, Section 13, Section 14, Section 15 and Section 3.1 of this Contract shall be perpetual unless terminated in accordance with this Contract. Section 3.1, Section 3.2, and Section 3.3 shall be in effect until Completion.

2.1.4 Notwithstanding the Effective Date of this Contract being fixed on the date that all Participants, the Acquirer, the Sites Authority, Reclamation and the State (in their capacities as signatories to the State and Federal Contracts), have complied with Section 2.1.1, it is agreed by each Participant that in consideration for the Sites Authority's signature to this Contract, and for its commitment to use commercially reasonable efforts to obtain the commitment of all Participants, the State and Reclamation (in their capacities as signatories to the State and Federal Contracts), to the Project, each Participant upon its execution and delivery of this Contract to the Sites Authority along with the required authorization and opinion described in Section 15.13 and any required evidence of compliance as required by Section 2.1.1 shall be immediately bound not to withdraw its respective offer made to enter into this Contract as executed and/or supplemented or to decrease or terminate its Base Facilities Capacity Interest and/or Downstream Facilities Capacity Interest for a period of 180 days from the date of the execution of this Contract by such Participant or such longer period agreed between Sites Authority and each Participant.

2.2 Prior Agreements

2.2.1 All Interim Agreements are terminated and of no further force and effect upon the Effective Date and all obligations identified in the Interim Agreements have been fulfilled. Such Interim Agreements shall have no force or effect on this Contract or the construction, and operation of the Project, including its governance.

2.2.2 Any unexpended funds made available to the Sites Authority in accordance with such Interim Agreements shall be transferred into the Revenue Fund and credited by the Sites Authority to amounts payable by applicable Storage Partners under this Contract for their respective Fixed Project Costs.

2.3 Reservoir Management Board

2.3.1 By executing this Contract, each Participant (i) shall designate a representative to become a member of the Reservoir Management Board, who shall actively participate in the Reservoir Management Board on behalf of such Participant, each in accordance with the JPA Agreement and the Sites Authority Bylaws, and (ii) agrees not to challenge the governance structure of the Sites Authority, specifically its delegation of powers and authority to the Reservoir Management Board.

2.3.2 The Sites Authority Board agrees not to challenge the governance structure of the Sites Authority, specifically, its delegation of powers and authority to the Reservoir Management Board.

2.3.3 The Sites Authority recognizes that the governance powers delegated by it to the Reservoir Management Board, which powers give Participants meaningful governance protections over their respective investments in the Project, is a primary and material benefit to each Participant and a primary and material inducement to each Participant's decision to enter into this Contract and to commit to fund the Project.

2.4 Payment Appendices

2.4.1 Subject to Section 2.4.2, if at any time a Participant elects to change its source of payment for Fixed Project Costs which election shall be subject to the Sites Authority's approval, in its reasonable discretion, such Participant shall provide to the Sites Authority an executed version of the applicable Payment Appendix reflecting such change.

2.4.2 If any Project Obligation under a Financing Agreement is outstanding (but only to the extent required under such Financing Agreement), a Participant's election to change its source of payment for Fixed Project Costs shall be subject to the terms of such Financing Agreement, including the right of the applicable Lender to consent to such change, if any.

SECTION 3. PROVISIONS APPLICABLE TO DEVELOPMENT, CONSTRUCTION AND OWNERSHIP

3.1 Obligation of the Sites Authority to Construct and Complete the Project

3.1.1 Subject to compliance with all Applicable Law and Governmental Approvals, the Sites Authority agrees to use commercially reasonable efforts to construct and complete the Project in accordance with the Approved Design Documents, provided that (i) each Participant provides its share of all required funding under this Contract; (ii) the Sites Authority is not prohibited by Applicable Law from proceeding; and (iii) the Sites Authority and the Reservoir Management Board have not mutually determined the Project to be infeasible and impractical.

3.1.2 By this Contract taking effect and the Sites Authority accepting payments for Project Costs under this Contract, the Sites Authority does not warrant that it will construct the Project and achieve Completion.

3.2 Conditions Precedent to Construction

3.2.1 Subject to Section 3.2.2, the Sites Authority shall commence construction, through execution of a Construction Contract of all or a portion of the Project, upon satisfaction of the following conditions:

(a) the Sites Authority's execution of initial Construction Contract, provided such action is permitted under the Sites Authority Bylaws, Applicable Law, Governmental Approvals and any necessary Partner Agreements; and

(b) receipt by the Sites Authority of (i) a certified resolution of the Reservoir Management Board confirming commencement of all or a portion of construction under that Construction Contract; and (ii) Governmental Approvals and any necessary Partner Agreements required to commence all or a portion of construction by the Sites Authority.

3.2.2 Where the total amount of Participants' payments under this Contract from and after the Effective Date exceeds $500,000,000, the Reservoir Management Board shall provide a one-time certified resolution authorizing the Board to make further payment of expenses of the Project in accordance with the Sites Authority Bylaws before any further expenses may be incurred by Participants.

3.3 Construction Progress Reports

The Sites Authority will provide Participants with construction progress reports in a form and substance approved by the Reservoir Management Board.

3.4 Ownership of Project Assets

Subject to Section 3.5 and Section 3.6, the Sites Authority shall own all Project Assets.

3.5 Base Facilities Capacity Interest

The Sites Authority hereby grants to each Participant, and each Participant shall own, a Base Facilities Capacity Interest in the amounts described in the Project Specific Information and otherwise in accordance with this Contract.

3.6 Downstream Facilities Capacity Interest

The Sites Authority hereby grants to those Participants indicated in the Project Specific Information as holding a Downstream Facilities Capacity Interest, and such Participants shall own, a Downstream Facilities Capacity Interest in the amounts described in the Project Specific Information and otherwise in accordance with this Contract.

3.7 Updates to Project Specific Information and Sites Operations Plan

3.7.1 The Parties agree that the Project Specific Information and the Sites Operations Plan may be updated from time to time as provided below to reflect changes or issues impacting the Project without amending the terms of this Contract.

3.7.2 No less frequently than annually, the Sites Authority will update:

(a) the Project Specific Information to reflect (i) any changes in each Storage Partner's Capacity Interest percentage(s) as a result of sale or acquisition of Capacity Interest in accordance with Section 8, any acquisition or disposition of Capacity Interest in accordance with Section 10, or any other changes in Capacity Interest in accordance with this Contract; and (ii) other changes to the Project Specific Information to reflect changes or issues impacting the Project; and

(b) Appendix 8 to reflect changes, if any, to the Sites Operations Plan made in the prior year.

SECTION 4. PROVISIONS APPLICABLE TO OPERATIONS AND MAINTENANCE

4.1 Obligation of the Sites Authority to Operate and Maintain the Project

4.1.1 The Sites Authority shall develop, operate and maintain the Project for the benefit of all Storage Partners in good faith and in accordance with Good Industry Practice. This duty applies to all aspects of Project development, permitting, and operations including: negotiating, entering into and enforcing Partner Agreements, or easements or other instruments for the use of third-party facilities and/or real property; negotiating and entering into regulatory permits; operating and maintaining the Project; timely communicating with Storage Partners regarding anticipated or actual Project diversions and releases of water; and timely communication with all Storage Partners of anticipated or actual problems or concerns with regard to the Project and potential remedies for the same.

4.1.2 Subject to compliance with all Applicable Law and Governmental Approvals, the Sites Authority agrees to diligently operate and maintain the Project Facilities, administer and maintain all Partner Agreements necessary for Project operations, and ensure compliance with such Partner Agreements, in accordance with this Contract, the Sites Operations Plan, Applicable Law, and Good Industry Practice, provided that (i) the Participants and the Acquirer provide all funding required under this Contract for operations and maintenance; and (ii) the Sites Authority and the Reservoir Management Board have not mutually determined the continued operation of the Project is infeasible and impractical.

4.1.3 The Sites Authority shall take diligent and commercially reasonable steps to protect, preserve, maintain, and defend the Sites Water Right, from impairment, diminution, loss, forfeiture, abandonment, adverse claims, or any other action or condition that may negatively affect the quantity, quality, priority, validity, enforceability, ability to convey or beneficial use thereof and implement the policy direction of the Reservoir Management Board and the Sites Authority Board in accordance with this Contract. Upon becoming aware of any actual or threatened impairment, injury, loss, or interference with the Sites Water ~~Rights~~Right, Sites Authority shall promptly investigate the matter and pursue such administrative, regulatory, judicial, or other remedies as are reasonably necessary to mitigate losses, recover damages, seek appropriate relief, enforce the Water Rights, and prevent or minimize future losses or impairment. Any costs to the Sites Authority associated with such actions shall be payable by Participants and Reclamation and follow Beneficiary Pays Principles. Nothing in this Section shall require Sites Authority to commence or continue litigation if, after consultation with legal counsel, Sites Authority reasonably determines that such action is not likely to provide a

material benefit to the Water Rights or Participants provided, however, that Sites Authority shall first consider and pursue other reasonable measures to protect the Water Rights and prevent further loss.

4.1.4 The Parties agree that maximizing diversions and beneficial use under the Sites Water Right is in the best interest of all Parties. Subject to compliance with all Applicable Law, Governmental Approvals, Good Industry Practice and Section 8, the Sites Authority and the Participants agree to take reasonable steps to optimize the diversion and beneficial use of Sites Water.

4.2 Sites Operations Plan

4.2.1 Each Party acknowledges and understands that the storage and conveyance of Water through the Project Facilities and applicable Partner Facilities consistent with each Storage Partner's Capacity Interests will be implemented in accordance with the Sites Operations Plan. The Sites Authority shall administer Partner Agreements as necessary to implement such storage and conveyance.

4.2.2 The initial form of the Sites Operations Plan approved by the Reservoir Management Board and the Sites Authority (as applicable) in accordance with the Sites Authority Bylaws is included as Appendix 8. Following a change to the Sites Operations Plan in accordance with Section 4.2.5, the updated Sites Operations Plan will be attached to this Contract in accordance with Section 3.6.

4.2.3 The Sites Operations Plan is intended to implement and provide detail to the terms of this Contract, including administration of Partner Agreements and use of Partner Facilities necessary to achieve expected Project benefits to the extent feasible, and shall not modify or amend this Contract in a manner that results in a material adverse effect on a Participant's rights under this Contract or the State or Federal Contracts (as applicable) to control its respective Base Facilities Capacity Interests or Downstream Facilities Capacity Interest, or its ability to have Sites Water or Other Water diverted into, stored in, released or conveyed through the Project Facilities on a pro-rata and substantially similar basis with other Storage Partners taking into account each Storage Partner's applicable Capacity Interests as calculated in accordance with the Sites Operations Plan. In the event of any inconsistency between the Sites Operations Plan and this Contract, the terms of this Contract shall prevail. All Participants and the Acquirer shall be subject to uniform operational standards regarding diversion, storage, release, and conveyance of Water through Project Facilities, except where expressly modified by Base Facilities Capacity Interests, Downstream Facilities Capacity Interests, or specific contractual rights under this Contract. The State and Federal Capacity Interest shall be subject to operation standards described in their respective contracts.

4.2.4 This Contract requires pro-rata calculations in Sections 4.2.3, 4.3.4, 4.4.3, 6.12.2, 8.1.1, 8.2.1, 10.3.2, 10.3.6, 10.3.7 and 11.1. The Reservoir Management Board shall approve equations for each of those pro-rata allocation calculations, with examples applying these equations, as an addition to the Sites Operations Plan before the Reservoir Management Board approves a resolution confirming commencement of all or a portion of construction of the Project pursuant to Section 3.2.1 of this Contract.

4.2.5 Subject to the Sites Authority Bylaws (including, in particular, Section 10.3), and the JPA Agreement (including, in particular, Section 2.3), changes to the Sites Operations Plan are subject to approval by the Reservoir Management Board as described in the Sites

Authority Bylaws. Prior to any such approval, the prior version of the Sites Operations Plan shall remain in full force and effect.

4.3 Use of Capacity Interests

Subject to special provisions in Appendix 9 for the SWP Participants, each Participant acknowledges and agrees:

4.3.1 that its Capacity Interests shall only be used for the storage and conveyance of Sites Water, or storage and conveyance of Other Water which may be stored in and conveyed through the Project Facilities in accordance with Applicable Law, Governmental Approvals and the Sites Operations Plan;

4.3.2 that except as set out in this Section 4 or in Section 8, it may not use another Storage Partner's Capacity Interests for the storage and conveyance of Sites Water or Other Water, that it shall utilize Sites Water in accordance with Applicable Law and Governmental Approvals and shall timely provide any information the Sites Authority may need to comply with Applicable Law and Governmental Approvals as described in the Sites Operations Plan, provided that Storage Partners with unused conveyance capacity shall permit other Storage Partners to use such unused conveyance capacity in accordance with Applicable Law and the Sites Operations Plan;

4.3.3 that it shall make reasonable efforts to optimize diversion and beneficial use of Sites Water during the Sites Water Right Development Period and shall not interfere with the Sites Authority's efforts to optimize diversion and beneficial use of Sites Water during the Sites Water Right Development Period;

4.3.4 Storage Partners who hold a Downstream Facilities Capacity Interest have first priority to use Downstream Facilities, including any Available Downstream Capacity. Unless otherwise agreed between Sites Authority and the holder of Downstream Facilities Capacity Interest, where use of Downstream Facilities exceeds a Storage Partner's Downstream Facilities Capacity Interest, the Storage Partner (excluding the State solely in its capacity under the Contract for Administration of Public Ecosystem Benefits) shall incur wheeling costs on a per Acre-foot basis determined as described in the Operations Plan, which wheeling fee shall be credited to those holders of Downstream Facilities Capacity Interest who provided the Available Downstream Capacity. Where Available Downstream Capacity is insufficient to meet demands, such capacity shall be apportioned pro-rata based on the relative Downstream Facilities Capacity Interest, as calculated in accordance with the Sites Operations Plan. Notwithstanding the foregoing, any wheeling fees attributable to Available Downstream Capacity provided by the State solely in its capacity under the Contract for Administration of Public Ecosystem Benefits shall be retained by the Sites Authority and applied as a credit against Fixed O&M Costs otherwise payable by the Participants under Section 6.6.

4.3.5 Storage Partners who do not hold a Downstream Facilities Capacity Interest shall have second priority access to use of the Available Downstream Capacity except to the extent that such Downstream Facilities Capacity Interest is leased or acquired in accordance with Section 8 of this Contract. If conveying Water under a second priority access to use of Available Downstream Capacity, the Storage Partner shall incur wheeling costs on a per Acre-foot basis determined as described in the Operations Plan, which wheeling fee shall be credited to those holders of Downstream Facilities Capacity Interest who provided the Available Downstream Capacity. Notwithstanding the foregoing, any wheeling fees attributable to

Available Downstream Capacity provided by the State solely in its capacity under the Contract for Administration of Public Ecosystem Benefits shall be retained by the Sites Authority and applied as a credit against Fixed O&M Costs otherwise payable by the Participants under Section 6.6.

4.4 Storage and Release of Sites Water

4.4.1 Subject to Applicable Laws and Governmental Approvals, the diversion of Sites Water to storage will take priority over the release of Water. Sites Water diverted from the Sacramento River by the Sites Authority will first be used to fill the Inactive Storage Pool. After the Inactive Storage Pool is filled, Sites Water diverted by the Sites Authority will be allocated to Storage Partners in Sites Reservoir based on each Storage Partner's Base Facilities Capacity Interest up to the Storage Partner's Storage Allocation, including any Storage Allocation leased, or acquired by such Storage Partner in accordance with Section 8 of this Contract; provided that an allocation of Sites Water to the SWP Participants shall be subject to special provision in Appendix 9. If a Storage Partner's Storage Allocation is not available or is full, then diverted Sites Water will be allocated to the remaining Storage Partners who have available Storage Allocation in proportion to their Base Facilities Capacity Interest. Notwithstanding the foregoing, Sites Water originating from Funks Creek and its tributaries, Stone Corral Creek and its tributaries, and the watershed of Sites Reservoir shall be allocated consistent with the Colusa County/Sites Authority MOU.

4.4.2 In accordance with the timing and process described in the Sites Operations Plan and Section 4.3, each Participant shall provide the Sites Authority with (i) a projected request for Sites Water the Participant seeks to have stored in the Project ("**Storage Opportunity Request Form**"), which, when added to such Participant's Stored Water, shall not exceed the sum of (a) that Participant's Storage Allocation; and (b) any other Storage Allocation leased or acquired by such Participant in accordance with Section 8 of this Contract; and (ii) a projected schedule for releases of such Participant's Stored Water ("**Release Request Form**").

4.4.3 Upon receipt of each Participant's Storage Opportunity Request Form, Release Request Form, and any other forms required in the Sites Operations Plan, the Sites Authority will review each Participant's proposed schedules and make necessary modifications in the manner provided in the Sites Operations Plan to ensure that the amounts, times, and rates of delivery of Sites Water to the Participant will be consistent with the Participant's Capacity Interests, Storage Partner's Stored Water, Storage Allocation and the Sites Authority's overall delivery ability, considering the then current delivery schedules of all Storage Partners. The Sites Authority will not unreasonably withhold any decisions made pursuant to this subsection and will not make a decision that results in a material adverse effect on a Storage Partner's rights under this Contract or the State and Federal Contracts (as applicable) to control its Capacity Interests, or its ability to have Water diverted into, stored in, or released through the Project Facilities in accordance with its Capacity Interests on a pro-rata and substantially similar basis with other Storage Partners, as calculated in accordance with the Sites Operations Plan.

4.4.4 All Storage Partners shall bear the risk of loss of Sites Water and any shortfall or reduction in Sites Water as set out in the Sites Operations Plan.

4.4.5 The Project provides water supply and water supply related environmental benefits, including water quality benefits, as well as flood control, recreation, and power generation benefits. The Project will be operated so as to maximize the water supply and water

supply related environmental benefits while continuing to provide the flood control and recreational benefits.

4.5 Other Water

4.5.1 Subject to Applicable Law and Governmental Approvals, all Storage Partners may store Other Water in, or convey Other Water by use of the Storage Partner's respective Capacity Interests in the Project Facilities as described in the Sites Operations Plan. The use of Project Facilities for Other Water must not negatively impact other Storage Partners' rights as set forth in this Contract or the State and Federal Contracts (as applicable) and shall be subject to the approval of the Sites Authority and the Reservoir Management Board as described in the Sites Authority Bylaws, whose approval shall not be unreasonably withheld. Any costs to the Sites Authority associated with Other Water shall follow Beneficiary Pays Principles, including if the Sites Authority is required to take actions to comply with Applicable Law or obtain or modify any new or existing Governmental Approvals.

4.5.2 The diversion and conveyance of Sites Water into Sites Reservoir will be prioritized over the diversion and conveyance of Other Water into Sites Reservoir.

4.5.3 Other Water shall accrue losses in a substantially similar manner as Sites Water, and the Storage Partner seeking to store or convey Other Water shall bear the risk of loss of the Other Water and any shortfall or reduction in Other Water.

4.6 Release of Water

4.6.1 Subject to Applicable Law, Governmental Approvals, the terms of this Contract, Project operational constraints and Partner Agreements, Participants retain discretion over release scheduling for Water held within their Capacity Interests.

4.6.2 The delivery point for Water shall be Funks Reservoir, the Terminal Regulating Reservoir or the downstream confluence with the Sacramento River Knights Landing Outfall Gates (the "Sacramento River Delivery Point") and shall be specified by each Storage Partner in its Release Request Form ("Delivery Point"). The Sites Authority's obligations and responsibilities for Water terminate at the applicable Delivery Point provided that:

(a) the Sites Authority shall comply with any water rights permit or license requirements relating to the re-diversion of Sites Water through the Delta and will conform to any applicable facility usage agreements and water rightss;

(b) without limiting Section 4.1.3, the risk of loss, cost of use and any shortfall or reduction in Water between the Funks Reservoir and Terminal Regulating Reservoir, as applicable, and the Sacramento River Delivery Point shall be borne by Participants using such Delivery Point and follow Beneficiary Pays Principles; and

(c) Section 4.6.11 shall apply with respect to Sites Authority liability for deliveries to the Sacramento River Delivery Point in the same manner as it applies to deliveries to Secondary Delivery Points.

4.6.3 For releases of Water to the Sacramento River Delivery Point, the Sites Authority, following the approval of the Reservoir Management Board and the Sites Authority

Board, as necessary, shall negotiate, enter into, and enforce any agreements necessary to convey Water from Funks Reservoir to the Sacramento River Delivery Point, including a Partner Agreement with the Tehama-Colusa Canal Authority and agreements or real property instruments executed with public agencies and landowners along the stretch of the Colusa Basin Drain between the Dunnigan Pipeline and the Sacramento River Delivery Point.

4.6.4 If the Reservoir Management Board and Sites Authority Board, as applicable, determine that the Colusa Basin Drain is inadequate to reliably convey Water to the Sacramento River Delivery Point, the Sites Authority shall undertake reasonable efforts to secure improved conveyance through existing Downstream Facilities and/or will study, plan, design, and construct new downstream facilities, such as a Dunnigan Pipeline extension to the Sacramento River upon designating funding for these purposes. As provided in Section 4.6.5 below, any costs borne by the Sites Authority in connection with these efforts shall follow Beneficiary Pays Principles. The Parties understand and agree that Downstream Facilities improvements related to Partner Facilities may be subject to the requirements of Section 2.6 of the JPA Agreement.

4.6.5 All releases of Water to the Sacramento River Delivery Point are subject to Applicable Law, Governmental Approvals and Partner Agreements and Section 4.13. ~~Each Storage Partner~~Participants and Reclamation shall bear the costs (monetary or otherwise) and risk of reasonable loss or reduction in moving their own Water between Funks Reservoir and/or the Terminal Regulating Reservoir and the Sacramento River Delivery Point. Any costs borne by the Sites Authority associated with delivering Water from Funks Reservoir and/or the Terminal Regulating Reservoir to the Sacramento River Delivery Points shall follow Beneficiary Pays Principles. The Parties understand and agree that Downstream Facilities improvements related to Partner Facilities may be subject to the requirements of Section 2.6 of the JPA Agreement.

~~4.6.6~~ The Sites Authority, upon direction from the Reservoir Management Board, will analyze, explore, evaluate, investigate, develop and report data in a timely manner to the Storage Partners to determine losses of Sites Water. Upon direction and designated funding from the Reservoir Management Board and the Sites Authority Board as applicable, the Sites Authority shall develop and implement strategies to address losses of Sites Water between Funks Reservoir and/or the Terminal Regulating Reservoir and the Sacramento River Delivery Point.

4.6.6 ~~4.6.7~~ The Sites Authority will convey released Water through Project Facilities in accordance with the provisions of this Contract and undertake all commercially reasonable measures, consistent with Applicable Law and Partner Agreements, to manage, control, and protect Sites Water to the applicable Delivery Point.

4.6.7 ~~4.6.8~~ Storage Partners may specify a Secondary Delivery Point(s) in their respective Release Request Form as described in the provisions of this Contract, subject to reasonable approval by the Sites Authority. The Sites Authority shall use commercially reasonable efforts to (i) negotiate, enter into and enforce Partner Agreements and (ii) assist Participants in conveying their Water to an approved Secondary Delivery Point(s). Such actions taken by the Sites Authority are subject to Applicable Law, Governmental Approvals, Partner Agreements and Section 4.1.2(i). All costs of use (monetary or otherwise), the risk of loss and any shortfall or reduction in Water between the Delivery Point and the approved Secondary Delivery Point(s) shall be borne by Participants and Reclamation using such Secondary Delivery Point and follow Beneficiary Pays Principles. Section 4.6.11 shall apply with

respect to Sites Authority liability for deliveries to an approved Secondary Delivery Point in the same manner as it applies to deliveries to the Sacramento River Delivery Point.

4.6.8 ~~4.6.9~~ In the event that requests by Storage Partners for the conveyance of Water to, or release of Water from, the Project exceed available conveyance capacity at any Project Facilities, such request will be considered and determined by the Sites Authority in accordance with the provisions of this Contract; provided that Storage Partners have a right to use facilities necessary to convey Water to the Delivery Point in proportion to their Base Facilities Capacity Interest; and to Downstream Facilities in proportion to their Downstream Facilities Capacity Interest.

4.6.9 ~~4.6.10~~ The Sites Authority may temporarily discontinue or reduce the conveyance of Water to, and release of Water from, the Project Facilities, if necessary, as described in the Sites Operations Plan.

4.6.10 ~~4.6.11~~ Without limiting Section 4.1.3, each Participant shall indemnify the Sites Authority, its directors, officers, employees, agents, and assigns on account of damage or claim of damage of any nature whatsoever for which there is legal responsibility, including property damage, personal injury, or death arising in connection with the control, carriage, handling, use, disposal, or distribution of Water beyond the Funks Reservoir and/or the Terminal Regulating Reservoir, except for any damage or claim arising in connection with (i) acts or omissions of the Sites Authority or any of its directors, officers, employees, agents, and assigns with the intent of creating the situation resulting in any damage or claim; (ii) willful misconduct of the Sites Authority or any of its directors, officers, employees, agents, and assigns; (iii) negligence of the Sites Authority or directors, officers, employees, agents, and assigns; (iv) damage or claims resulting from a malfunction of Project Asset.

4.7 Power Generation and Other Revenues

4.7.1 To the extent power or energy are generated by Project Facilities, sales of such power or energy will be managed by the Sites Authority. Any revenues received by the Sites Authority for the sale or other disposition of power or energy shall be used to offset Variable O&M Costs (including funding of reserves in accordance with the Sites Authority Policies), and to the extent that such revenues exceed Variable O&M Costs in a Fiscal Year, any remaining revenues will be used to offset Fixed O&M Costs. Any such revenues will be allocated by the Sites Authority to Storage Partners in proportion to the amount of Water released on behalf of the Storage Partners during the Fiscal Year. The Parties acknowledge and agree that the release of Water has a higher priority than the generation of power by Project Facilities and power generation is not guaranteed to Storage Partners with the release of Water. Notwithstanding the foregoing, revenues attributable to power or energy generated from Water released to provide benefits under the Contract for Administration of Public Ecosystem Benefits shall not be allocated or paid to the State and shall instead be retained by the Sites Authority and applied first to offset Variable O&M Costs and then to offset Fixed O&M Costs otherwise payable by the Participants.

4.7.2 Any revenues received by the Sites Authority from the sale, lease, license, or other use or disposition of Project Assets, including excess real property, mitigation credits, grazing rights, or similar interests, shall be retained by the Sites Authority and applied first to the costs associated with generating or administering such revenues and then to offset Fixed O&M Costs otherwise payable by the Participants; provided that any sale or other disposition of

Project Assets shall be subject to Applicable Law, Governmental Approvals, the State and Federal Contracts, and any applicable Financing Agreements.

4.8 Entry and Inspection

The Sites Authority and the Participants each agree that Participants shall be allowed, at reasonable times and upon reasonable prior notice, and at the Participant's expense, to enter onto the Sites Owned Facilities for reasonable purposes (including dam safety), in accordance with the Sites Authority's reasonable safety regulations and policies and subject to Applicable Law and Governmental Approvals.

4.9 Measurement of Water

The Sites Authority shall measure, or cause to be measured, Water and shall keep and maintain accurate and complete records of diversions, storage and release of Water in accordance with Good Industry Practice.

4.10 Excused Performance

4.10.1 Upon the occurrence of an event of Force Majeure that materially and adversely impacts performance of a ~~Parties~~Party's obligations under this Contract, (a) the Sites Authority shall be excused from its obligations under this Contract for the period during which it is unable to comply with such obligations as a result of such event of Force Majeure, and (b) the Participants and the Acquirer shall be excused from their obligations under this Contract for the period during which they are unable to comply with such obligations as a result of the event of Force Majeure, other than the payment of Project Costs described in Section 6 of this Contract, which obligations are not subject to reduction or abatement.

4.10.2 Any excuse of obligations in accordance with this Section 4.10 is subject to the proviso that, upon obtaining knowledge of an event of Force Majeure, such Party: (a) promptly notifies the Sites Authority and/or the other Party or Parties of the event of Force Majeure; (b) provides reasonable details and updates relating to such event of Force Majeure; and (c) implements mitigation measures to the extent commercially reasonable.

4.11 Shortages and Water Quality

4.11.1 If for any reason other than those described in this Section 4.11 there is a reduction in the Sites Water diversions or releases or other circumstances, which, notwithstanding preventive or remedial measures that the Sites Authority may or may not take in its sole discretion, threatens a permanent or sustained material reduction in the supply of Sites Water, including reductions resulting from loss of reservoir capacity, Inactive Storage Pool conditions, infrastructure impairment, regulatory restrictions, sedimentation, or other long-term operational limitation to be made available to the Storage Partners, the Sites Authority will adjust the storage, diversion and release of Sites Water in proportion to each Storage Partner's applicable Capacity Interest.

4.11.2 Neither the Sites Authority nor any of its directors, officers, agents, or employees shall be liable for any damage, direct or indirect, arising from the shortages in the amount of Water to be made available to the Participants under this Contract caused by non-availability of Water to the Sites Authority under the Sites Water Right (as applicable to

Sites Water), Applicable Law, Governmental Approval or caused by drought, or any other cause beyond the Sites Authority's control.

4.11.3 The Sites Authority makes no representation, warranty or guarantee of the quality of Water delivered under this Contract.

4.12 Governance

4.12.1 The Parties agree that:

(a) the Sites Authority Board has reserved certain powers, as described in the JPA Agreement;

(b) the Reservoir Management Board has been delegated exclusive decision-making authority for specified activities, identified as "Delegated Authorities" in Section 10.2 of the Sites Authority Bylaws, which shall not be amended without approval of the Reservoir Management Board;

(c) the Sites Authority and the Reservoir Management Board have shared decision-making authority for specified activities, as described in the Sites Authority Bylaws;

(d) the Sites Authority Bylaws and the JPA Agreement set out voting procedures for amendment thereof that shall be complied with by all Parties;

(e) any Participant shall have the option to serve as an Associate Member of the Sites Authority Board, subject to the rights and limitations set forth in the Sites Authority Bylaws;

(f) no change can occur and no modification can be made to the governance structure described in this Section 4.12 and collectively established by this Contract, the JPA Agreement, and the Sites Authority Bylaws, except in the manner provided for in the Sites Authority Bylaws;

(g) if the delegation of powers or authorities by the Sites Authority Board to the Reservoir Management Board or the governance structure described in this Section 4.12 and collectively established by this Contract, the JPA Agreement, and the Sites Authority Bylaws, is held invalid by a court having jurisdiction, then the Parties shall promptly meet and make efforts to negotiate a substitute for such provision or part, which shall, to the greatest extent legally permissible, effect the original intent of the Parties, including (as applicable) an appropriate assignment of powers, authorities, and duties to Participants to protect their investments in the Project, resulting from such invalidated portion;

(h) if the delegation of powers or authorities by the Sites Authority Board to the Reservoir Management Board or the governance structure described in this Section 4.12 and collectively established by this Contract, the JPA Agreement, and the Sites Authority Bylaws is held invalid by a court having jurisdiction, then, unless otherwise mutually agreed pursuant to subsection (g) above, for any action(s) or decisions specified in this Contract or the Sites Authority Bylaws as requiring the approval, consent or decision of the Reservoir Management Board,

such action or decision will instead require the approval or consent of a weighted share of the Participants as specified in this Contract or the Sites Authority Bylaws, where the weighted share of each Participant shall be calculated as (a) one divided by the total number of Participants, multiplied by 50, plus (b) the Base Facilities Capacity Interest of each Project Participant divided by the total Base Facilities Capacity Interest of all Participants identified in Appendix 2, multiplied by 50, such that the weighted total of all Participant shares shall total 100. This requirement shall apply to, without limitation and at a minimum, Sections 3.2.1(b), 3.2.2, 4.2.4, 4.5.1, 4.6.4, 4.15.1, 8.1.1(c), 8.1.3, 8.2.1(a)(vi) & (c), 8.2.4, 10.2.1 and 11.1.1(a); and

(i) notwithstanding anything in this Contract to the contrary, for purposes of representation and voting on the Reservoir Management Board, Zone 3 shall have the representation and voting rights provided for in the Sites Authority Bylaws, including the treatment of Zone 3's Reservoir Management Board seats for purposes of calculating the equal and Base Facilities Capacity Interest components of the weighted vote. Such representation and voting rights shall also apply to any weighted vote of the Participants conducted pursuant to subsection (h) above. For all other purposes under this Contract, Zone 3 shall constitute a single Participant.

4.13 Maintenance and Compliance with Partner Agreements

The Sites Authority shall (i) enter into, (ii) maintain, and (iii) ensure compliance with, each applicable Partner Agreement necessary for the operation of the Project in accordance with this Contract, the Sites Operations Plan, Applicable Law and Good Industry Practice.

In performing its obligations under this Contract, the Sites Authority shall use commercially reasonable efforts, consistent with Good Industry Practice and subject to applicable technical, legal, and third-party constraints, to ensure that the terms of the Partner Agreements are complied with. Any amendment to a Partner Agreement shall be subject to the approvals specified in the Sites Authority Bylaws.

The Sites Authority shall undertake all reasonable measures, consistent with Applicable Law, Governmental Approvals and Partner Agreements, to manage, control, and protect Water through the applicable Delivery Point.

4.14 SWP Participant Operations Coordination

Each SWP Participant shall coordinate with Acquirer and the Sites Authority regarding annual scheduling, conveyance, use, and operational planning for its Capacity Interests and Sites Water, all in accordance with Appendix 9.

4.15 Capital Improvement Plan

4.15.1 Every year starting at the Completion, the Sites Authority shall generate a five year forecast for all capital improvements including capital cost estimates for each improvement, any operating cost changes associated with the capital expenditure, and project funding prioritization for the Project Facilities subject to approval by the Reservoir Management Board and the Sites Authority (as applicable) as described in the Sites Authority Bylaws ("**Capital Improvement Plan**"). The approved Capital Improvement Plan shall be reflected in

the annual budget. The Sites Authority shall make good faith efforts to include any activities that the Sites Authority reasonably anticipates would require amendment to the adopted annual budget for Project Costs for each Fiscal Year.

4.15.2 The Parties agree that additional activities, work or services may be required that were not contemplated in the Capital Improvement Plan. The Parties therefore agree to use commercially reasonable efforts and take reasonable actions to address and resolve any such increased or additional activities, work or services, and associated expenses.

4.16 Drought Emergency Supplies Requirement

4.16.1 The Parties acknowledge that the Sites Authority has entered a Contract for Administration of Public Benefits with DWR ("**CAPB-DWR**") and is to receive State Proposition 1 funds relating to the Sites Project delivering public benefits associated with drought emergency response and associated adaptive management requirements.

4.16.2 The Participants agree to perform the following tasks related to supporting the Sites Authority's demonstrating compliance with the CAPB-DWR:

(a) Prepare and incorporate a Drought Emergency Response Program ("**DERP**") into the Sites Operations Plan which shall be activated and administered by the Sites Authority. No Participant is obligated to dedicate, reserve, or release its Sites Water for public benefit purposes except as independently determined by such Participant.

(b) Reasonably cooperate with any actions and provide any information reasonably necessary for the Sites Authority to demonstrate compliance with the CAPB-DWR, including implementing any associated reporting, accounting and monitoring.

(c) Reasonably cooperate in the implementation of adaptive management obligations contained in the DERP. The Parties recognize that implementation of adaptive management actions does not imply or warrant guaranteed achievement of any specific delivery quantity, operational outcome, or drought emergency response target in any individual year or series of years.

(d) Consistent with the CAPB-DWR, to the extent that a Participant chooses to relocate its Sites Water from Sites Reservoir to another storage location south of the Sacramento-San Joaquin Delta ("SOD") in non-emergency years for the purpose of making Sites Water available from SOD storage in subsequent emergency years, and Participant is able to demonstrate that previously relocated Sites Water was physically delivered from such SOD storage during the subsequent emergency year, the Sites Authority shall seek DWR approval under the CAPB-DWR to account for such deliveries as contributing to the target volume in the emergency year such Sites Water is delivered.

4.16.3 Nothing in any Public Benefit Agreement or adaptive management process shall be construed to amend this Contract or alter the allocation of rights, responsibilities or Capacity Interests established under this Contract except through an amendment approved in accordance with Section 15.12.

SECTION 5. FINANCING OF THE PROJECT

5.1 The Sites Authority Financing of the Project

The Sites Authority:

5.1.1 agrees to provide Sites Financing for Fixed Project Costs, provided that each Financing Participant and the Acquirer (as applicable) shall pay Sites Financing Costs relating to such Sites Financing allocable to the Participant in accordance with Section 6.4;

5.1.2 may incur Project Obligations from time to time for the purpose of financing or refinancing the Fixed Project Costs on an interim or permanent basis; and

5.1.3 in incurring Project Obligations, will use commercially reasonable efforts to obtain cost effective financing for the Fixed Project Costs on reasonable terms and conditions consistent with this Contract and with the approval of the Reservoir Management Board.

5.2 Notice of Expected Incurrence of Sites Financing

5.2.1 The Sites Authority will provide written notice to the Participants substantially in the form of Appendix 4 of the expected incurrence of (i) the first Sites Financing, at least 30 days, but not more than 60 days prior to, or (ii) any other Sites Financing at least 150, but not more than 180 days prior to (A) the expected date of the incurrence of such Sites Financing, or (B) if the Project Obligations are expected to be sold in the public capital markets, the Business Day prior to the scheduled date on which the offering document (which may be a preliminary offering document) relating to such Sites Financing is anticipated to be made available to potential investors, that includes:

(a) the anticipated date of the incurrence by the Sites Authority of such Sites Financing (a "**Proposed Sites Financing Incurrence Date**");

(b) a description of the proposed financing structure, expected method of sale, expected term, pro-forma cash flows and each Participant's estimated share of the Fixed Project Costs to be financed or refinanced from the proceeds of such proposed Sites Financing;

(c) each Participant's estimated annual Sites Financing Costs relating to the proposed Sites Financing; and

(d) the amount that the Participant would be required to deposit with the Sites Authority if the Participant elects to self-fund such costs in accordance with Sections 5.4 and 5.5,

(each such notice constituting a "**Sites Financing Incurrence Notice**").

5.3 Provisions Applicable to Financing Participants

5.3.1 This Section 5.3 shall be applicable to each Financing Participant participating in a Sites Financing.

5.3.2 No later than 30 days following a request by the Sites Authority, each Financing Participant shall:

(a) provide to the Sites Authority such information and disclosure as may be reasonably required by the Sites Authority in connection with the incurrence of a Sites Financing;

(b) provide to the Sites Authority such information regarding that Participant as the Sites Authority may reasonably require in order to comply with (i) any reporting obligations under any Sites Financing; or (ii) the obligations of the Sites Authority under any continuing disclosure undertaking entered into in connection with the incurrence of a Sites Financing;

(c) deliver to the Sites Authority all certificates and Participant counsel opinions reasonably required by the Sites Authority or bond counsel to the Sites Authority in connection with the sale and closing of such Sites Financing; and

(d) execute and deliver to the Sites Authority such additional documents, including any necessary further assurances in relation to the incurrence of any Sites Financing as the Sites Authority may reasonably request, provided that all such documents will be provided in accordance with Applicable Law.

5.3.3 No Financing Participant shall be permitted to prepay its Financing Obligations with respect to an outstanding Project Obligation if such prepayment, in and of itself, shall cause a reduction in any of the then-current bond credit ratings of any outstanding Project Obligations that were sold in the public capital markets, as reasonably determined by the Sites Authority

5.4 Participant Self-Funding Election

5.4.1 Each Participant may elect to self-fund all or a portion of the Participant's share of Fixed Project Costs proposed by the Sites Authority to be financed or refinanced in accordance with a Sites Financing Incurrence Notice.

5.4.2 Such election shall be made by delivering written notice to the Sites Authority, substantially in the form attached as Appendix 3 (each, a "**Self-Funding Notice**"), on or before the 90th day prior to (i) the anticipated date of the applicable Sites Financing Incurrence Date or (ii) if the Project Obligations are expected to be sold in the public capital markets, the Business Day prior to the scheduled date on which the offering document relating to such Sites Financing is anticipated to be made available to potential investors, as applicable (a "**Self-Funding Election Date**"), setting forth the amount of Fixed Project Costs that the Participant proposes to finance or refinance from the proposed Sites Financing and any share of Fixed Project Costs that the Participant proposes to self-fund.

5.4.3 A Participant making an election in a Self-Funding Notice to self-fund only a portion of the applicable Fixed Project Costs assignable to that Participant with respect to Sites Financing shall be treated both as a Financing Participant and a Self-Funding Participant under this Contract with respect to such Sites Financing.

5.4.4 A Participant shall not be permitted to withdraw, change or otherwise terminate a Self-Funding Notice with respect to such self-funded portion of a Sites Financing after the applicable Self-Funding Election Date; provided that a Participant may increase its self-funded portion of a Sites Financing after the Self-Funding Election Date if the financing structure, terms, or conditions set forth in the good faith estimates accompanying the resolution of the Sites Authority authorizing such financing deviate materially from those provided in the Financing Incurrence Notice; provided further that an election of a Participant to increase its self-funded portion pursuant to this Section 5.4.4 must be made within 10 days after the consideration of the resolution of the Sites Authority authorizing such financing.

5.4.5 The execution of a master agreement by the Sites Authority in connection with the United States Environmental Protection Agency's Water Infrastructure Finance and Innovation Act loan program, any other State, federal or other public agency loan or any agreement relating to short-term or interim borrowing, including revolving credit agreements, lines of credit and commercial paper notes, shall constitute a Sites Financing for purposes of this Section 5, regardless of when funds are drawn thereunder.

5.4.6 Notwithstanding a Participant's compliance with the self-funding election provisions of Section 5.4, a Participant that was previously a Financing Participant with respect to a prior Project Obligation shall not be permitted to be a Self-Funding Participant for the purpose of funding Fixed Project Costs that will be funded in part with proceeds of a subsequent Project Obligation to be sold in the public capital markets if such Participant's election to be a Self-Funding Participant, in and of itself, shall result in the bond credit rating on such proposed Project Obligation to be sold in the public capital markets to be lower than any of the then-current bond credit ratings of the then-outstanding Project Obligations that were sold in the public capital markets, as reasonably determined by the Sites Authority.

5.5 Provisions Applicable to Self-Funding Participants

5.5.1 This Section 5.5 shall apply to each Self-Funding Participant to the extent such Participant complies with such Participant's obligation to pay the Fixed Project Costs identified in the respective Participant's Self-Funding Notice through Self-Funding Participant Cash Payments.

5.5.2 Each Self-Funding Participant shall deposit cash with the Sites Authority in the amount specified in the Self-Funding Notice provided by the Self-Funding Participant to the Sites Authority under Section 5.4.2 (each, a "**Self-Funding Participant Cash Payment**"), by the date that is 60 days prior to (i) the applicable Sites Financing Incurrence Date, or (ii) if the Project Obligations are to be sold in the public capital markets, the Business Day prior to the scheduled date on which the offering document (which may be a preliminary offering document) relating to such Sites Financing is anticipated to be made available to potential investors (the "**Self-Funding Participant Cash Payment Date**"); provided that if the Self-Funding Cash Payment is not received by the Self-Funding Participant Cash Payment Date, the Participant will be provided with a grace period of 30 days after the Self-Funding Participant Cash Payment Date for the Participant to make such Self-Funding Participant Cash Payment. If payment of the Self-Funding Participant Cash Payment is made within such grace period, such Participant will be treated as a Self-Funding Participant.

5.5.3 The Sites Authority will deposit each Self-Funding Participant Cash Payment in an individual account or accounts for each Self-Funding Participant established and held by the

Sites Authority separate and apart from the Sites Authority's other funds and accounts, and shall apply such amount, including the investment earnings thereon, to pay such Self-Funding Participant's share of the cost of the applicable Fixed Project Costs in accordance with Section 6.5 or to pay costs of any refinancing, as applicable. Such accounts and any investments shall be held in compliance with Applicable Law.

5.5.4 In the event that the Self-Funding Participant Cash Payment is not received prior to the expiration of the grace period described in Section 5.5.2, such Participant shall constitute a Financing Participant with respect to such Sites Financing and be obligated to pay Sites Financing Costs relating to such Sites Financing.

5.5.5 To the extent a Self-Funding Participant meets its obligation under this Contract to pay Fixed Project Costs through Self-Funding Participant Cash Payments, such Participant hereby represents, warrants, and covenants that such Self-Funding Participant Cash Payments shall and will be delivered to the Sites Authority free and clear of any prior lien.

5.5.6 At the time of disbursement of any proceeds of Project Obligations there will be a disbursement of proceeds from the accounts holding the Self-Funding Participant Cash Payments made by Self-Funding Participants, and in each instance, the disbursement of proceeds of Project Obligations and the disbursement of proceeds from the accounts holding the Self-Funding Participant Cash Payments made by the Self-Funding Participants shall be made proportionately based on each such Participant's Capacity Interests. In the event that a Participant is both a Financing Participant and a Self-Funding Participant, the allocation of the proceeds of Project Obligations and the disbursement from the account holding such Participant's Self-Funding Participant Cash Payment to the payment of such Participant's share of Fixed Project Costs, will be made in proportion to such Participant's Self-Funding Participant Cash Payment and the Participant Fixed Project Costs to be financed from the proposed Sites Financing identified in such Participant's Self-Funding Notice relative to the Total Participant Obligation set forth in such Participant's Self-Funding Notice; provided that if a Participant that is both a Financing Participant and a Self-Funding Participant elects to increase its self-funded portion of Fixed Project Costs after the Self-Funding Election Date pursuant to Section 5.4.4, the amounts used to determine the allocation between the proceeds of Project Obligations and disbursements from the account holding such Participant's Self-Funding Participant Cash Payment will be adjusted to take into account the increase to such Participant's self-funded portion of Fixed Project Costs.

5.5.7 If, following (i) Completion or (ii) to the extent a Participant elects to self-fund its share of Fixed Project Costs of additional Project Facilities following Completion, the completion of the additional Project Facilities funded, in part, with a Sites Financing that such Participant elected not to participate in, there is any portion of any Self-Funding Participant Cash Payments (and investment earnings thereon) remaining unspent by the Sites Authority, then such unspent Self-Funding Participant Cash Payments (including investment earnings thereon) shall be returned by the Sites Authority to the applicable Self-Funding Participants, or, at the written direction of each such Self-Funding Participant shall be paid to the Sites Authority and credited to future Fixed Project Costs of the applicable Self-Funding Participant under this Contract.

SECTION 6. PAYMENT OF PROJECT COSTS

6.1 Overview of Project Costs

6.1.1 Subject to the special provisions for SWP Participants in Appendix 9, each Participant shall be required to pay Project Costs as follows:

(a) Financing Obligations as set out in Section 6.4 for Financing Participants;

(b) Fixed Project Costs, calculated in accordance with Section 6.5;

(c) Fixed O&M Costs, calculated in accordance with Section 6.6; and

(d) Variable O&M Costs, calculated in accordance with Section 6.7.

6.2 Estimated Charges

6.2.1 On or before March 1 of each Fiscal Year or such other date agreed in the Sites Authority Policies, the Sites Authority shall provide (i) each Participant, and (ii) the Acquirer and the SWP Participants, in the case of the SWP Participants ((i) and (ii) together, to be referred to as the "**Billing Party(ies)**") with an estimated statement of anticipated Project Costs required to be paid by each Participant in (i) the following Fiscal Year and (ii) under this Contract, which statement may be used by the Billing Parties for budgeting purposes.

6.2.2 In accordance with the timing required by the JPA Agreement, the Reservoir Management Board shall prepare and recommend, and the Sites Authority Board will adopt a budget for Project Costs for the following Fiscal Year. Such budget shall include any costs associated with the Capital Improvement Plan.

6.3 Billing Statements

6.3.1 Within 30 days after the Effective Date and thereafter, on or before [January][1] and [July][1] of each Fiscal Year or such other dates as may be provided in the Sites Authority Policies, the Sites Authority will provide each Billing Party with a billing statement ("**Billing Statement**") setting forth:

(a) from the Effective Date until the termination of this Contract, for Financing Participants, for the Participant's share of the Participant's Financing Obligations due for the applicable six-month period, calculated in accordance with Section 6.4;

(b) from the Effective Date until the termination of this Contract, for Self-Funding Participants, for the Participant's share of Fixed Project Costs due for the applicable six-month period, calculated in accordance with Section 6.5; provided, to the extent all or a portion of such costs have been self-funded with a Self-Funding Cash Payment, then such amounts shall be deducted from the applicable account established for the respective Self-Funding Participants in accordance with Section 6.8.1(b);

(c) from twelve months prior to completion of construction of the Project until the termination of this Contract, for all Participants, the Participant's share of Fixed

O&M Costs, due for the applicable six-month period calculated in accordance with Section 6.6; and

(d) from six months prior to completion of construction of the Project until the termination of this Contract, for all Participants, the Participant's share of Variable O&M Costs due for the applicable six-month period calculated in accordance with Section 6.7.

6.3.2 Project Costs billed to each Billing Party and included on any Billing Statement shall be billed as follows:

(a) Fixed O&M Costs, Financing Obligations and Fixed Project Costs shall be billed one-year in advance; and

(b) Variable O&M Costs shall be billed for the applicable six-month period commencing on the succeeding [January][1] or [July][1].

6.3.3 Each Billing Statement shall:

(a) be consistent with the approved Sites Authority budget;

(b) be based upon Project Costs incurred by the Sites Authority during the current Fiscal Year and planned Project Costs for the upcoming Fiscal Year;

(c) take into account applicable credits received by the Sites Authority and estimated investment earnings on moneys related to the Project held by the Sites Authority, provided that amounts paid to the Sites Authority for Fixed Project Costs shall not be invested at a yield or in any manner which would result in interest on any Project Obligations being includable in gross income for federal income tax purposes; and

(d) be accompanied by reasonable supporting documentation showing the basis of the Project Costs shown on the Billing Statement.

6.4 Financing Obligations

Each Financing Participant's Financing Obligations shall be determined in accordance with the following formula:

FO = [BFO x BFPP] + [DFO x DFPP]

Where:

FO = Financing Obligations

BFO = Financing Obligations allocable to Base Facilities

BFPP = Base Facility Financing Participation Percentage

DFO = Financing Obligations allocable to Downstream Facilities

DFPP = Downstream Facility Financing Participation Percentage

6.5 Fixed Project Costs

Each Participant's Fixed Project Costs shall be determined in accordance with the following formula:

FPC = [BFC x BCI] + [DFC x DCS]

Where:

FPC = Participant Fixed Project Costs

BFC = Fixed Project Costs allocable to Base Facilities

BCI = Each Participant's Base Facilities Capacity Interest

DFC = Fixed Project Costs allocable to Downstream Facilities

DCS = Each Participant's Downstream Facilities Capacity Interest,

in any case to the extent that such Fixed Project Costs are not also included in such Participant's Financing Obligations.

6.6 Fixed O&M Costs

Each Participant's Fixed O&M Costs shall be determined in accordance with the following formula:

FOMC = [BFOMC x BCI] + [DFOMC x DCS]

Where:

FOMC = Fixed O&M Costs

BFOMC = Fixed O&M Costs allocable to Base Facilities

BCI = Each Participant's Base Facilities Capacity Interest

DFOMC = Fixed O&M Costs allocable to Downstream Facilities

DCS = Each Participant's Downstream Facilities Capacity Interest

6.7 Variable O&M Costs

Each Participant's Variable O&M Costs shall be determined in accordance with the following formula:

VOMC = [(PWP / TWP) x BPVOMC] + [(PWR / TWR) x BRVOMC] + [(PWRD/TWRD) x DVOMC]

Where:

VOMC = Variable O&M Costs

PWP = Water conveyed into Sites Owned Facilities attributable to a Participant

TWP = Total Water conveyed into Sites Owned Base Facilities

BPVOMC = Variable O&M Costs allocable to Water conveyed into Base Facilities

PWR = Water released from Sites Owned Base Facilities attributable to a Participant

TWR = Total Water released from Sites Owned Base Facilities

BRVOMC = Variable O&M Costs allocable to Water released from Base Facilities

PWRD = Water released from Sites Owned Base Facilities that flows into Downstream Facilities attributable to a Participant

TWRD = Total Water released from Sites Owned Base Facilities that flows into Downstream Facilities

DVOMC = Variable O&M Costs allocable to Downstream Facilities

6.8 Due Date and Method of Payments by Participants

6.8.1 Within 30 days after receipt of each Billing Statement:

(a) each Financing Participant shall pay the charges for Project Costs shown on the Billing Statement; and

(b) each Self-Funding Participant shall pay the charges for Project Costs shown on the Billing Statement (which shall reflect such Self-Funding Participant's Self-Funding Participant Cash Payments). The Sites Authority shall withdraw from Self-Funding Participant Cash Payments on deposit in the account established for such Self-Funding Participant the Fixed Project Costs that such Self-Funding Participant has elected to self-fund in accordance with the applicable Self-Funding Election.

6.8.2 Each Participant shall make payments under this Contract whether or not the Project is completed or operable and notwithstanding the suspension, interruption, interference, reduction or curtailment of operation of the Project or of water service in whole or in part for any reason.

6.8.3 Payments under this Contract by each Participant or withdrawals from any account established for a Self-Funding Participant are not subject to any reduction, whether offset or otherwise, and are not conditioned upon performance by the Sites Authority or any other Participant under this Contract or any other agreement.

6.8.4 The obligation of each Participant to make payments under this Contract (including Financing Obligations with respect to each Financing Participant) is absolute, irrevocable and unconditional irrespective of: (i) any change in the time, manner or place of payment of its obligations under this Contract (including the terms in Section 6.8.1 of this Contract) or any other amendment or waiver of or any consent to departure from any of the terms of this Contract or the Project Obligations; (ii) any release or amendment or waiver of, or consent to departure from, any State and Federal Contract, (iii) any taking, exchange, sale or release of any collateral, for any Project Obligation or any manner of application of collateral, or proceeds thereof, to any Project Obligation; (iv) any change, restructuring or termination of the existence of the Sites Authority or any Participant; (v) any present or future law, regulation or order of any jurisdiction or of any agency thereof purporting to increase, reduce, amend, restructure or otherwise affect any term of this Contract or the Project Obligations; and (vi) any other setoff, defense or counterclaim whatsoever with respect to this Contract, the Project Obligations or the transactions contemplated thereby which may constitute a legal or equitable defense available to, or discharge of, the Sites Authority or any Participant.

6.8.5 Subject to Section 10.3.6, each Participant shall:

(a) not be liable under this Contract for the obligations of any other Participant; and

(b) be solely responsible and liable for performance of its obligations under this Contract.

6.8.6 The obligation of each Participant to make payments under this Contract is a several obligation and not a joint obligation with those of the other Participants.

6.9 Interest on Late Payments

6.9.1 Any amount of the Project Costs billed in a Fiscal Year by the Sites Authority under this Section 6, which remains unpaid 30 days after the due date in Section 6.8.1, as applicable, shall bear interest from such day at the per annum interest rate equal to the then-current rate on the LAIF until paid.

6.9.2 Interest paid under Section 6.9.1 by a Financing Participant shall not change the Financing Participation Percentage of such Financing Participant, but shall be applied to the payment of Sites Financing Costs of all Financing Participants other than the Financing Participant paying such interest in accordance with the applicable Financing Agreement.

6.10 Annual True-Up

6.10.1 No later than 180 days after the end of each Fiscal Year, the Sites Authority will evaluate the Project Costs paid by or deducted from the deposit made by each Participant under this Contract against the actual Project Costs for the Fiscal Year and will credit any overpayment by any Participant to such Participant's payment for the following Fiscal Year; provided, however, that to the extent any Project Costs have not been finally determined within 180 days after the end of a Fiscal Year, following the final determination of such Project Costs, the Sites Authority will promptly, and in no case later than 60 days after finalization of Project Costs, credit any overpayment by any Participant to such Participant's payment for the following Fiscal Year.

6.11 Supplemental Billing

6.11.1 Billing Statements sent to each Billing Party will be based on the factors identified in Section 6.3. In the event that the amounts paid by the Participants are insufficient to pay the actual Project Costs, as applicable, for the applicable Fiscal Year, the Sites Authority may issue supplemental Billing Statements to the Billing Parties apportioned in accordance with the terms in this Section 6, and such amounts will be due and payable by the Participants within 90 days after receipt of such Billing Statement; provided, however, that the Sites Authority shall not issue supplemental Billing Statements for any charges 3 years or more after the underlying costs for such supplemental Billing Statements were incurred by the Sites Authority, unless the Sites Authority did not know, and would not have known through exercise of reasonable care, that such underlying costs would require supplemental Billing Statements during such 3 year period.

6.11.2 If the Sites Authority becomes aware of circumstances which may result in the need to issue supplemental Billing Statements to the Billing Parties, the Sites Authority will notify the Billing Parties of such circumstances as promptly as reasonably possible.

6.12 Contest of Accuracy of Charges

If a Billing Party questions or disputes the correctness of any Billing Statement by the Sites Authority, such Billing Party shall pay the Sites Authority the amount claimed when due and shall within 30 days after receipt of such Billing Statement request an explanation from the Sites Authority. If the bill is determined to be incorrect, the Sites Authority will adjust the bill to such Billing Party in the next applicable Billing Statement. If the Sites Authority and the Billing Party fail to agree on the correctness of a bill within 30 days after Billing Party has requested an explanation, the Sites Authority and such Billing Party shall use the dispute resolution process in accordance with Section 12.

6.13 Payments Under the State and Federal Contracts

6.13.1 The Sites Authority shall promptly collect all amounts due from CWC and Reclamation under the payment provisions of the State and Federal Contracts and shall enforce, and take all commercially reasonable steps, actions and proceedings for the enforcement of all payment obligations of CWC and Reclamation under the State and Federal Contracts.

6.13.2 In the event of a shortfall in the collection of amounts due under the State and Federal Contracts that requires the Participants to make supplemental payments pursuant to the supplemental billing provisions set forth in Section 6.11, to the extent that amounts are subsequently collected from CWC or Reclamation, as applicable, the Sites Authority shall apply such amounts either: (i) to directly reimburse such Participants; or (ii) as a credit to the next amount due by such Participants under this Contract, in each case, in an amount equal to the supplemental payment made by a respective Participant due to the shortfall in the collection of amounts due under the State and Federal Contracts. If such amounts collected from CWC or Reclamation, as applicable, are not sufficient to reimburse the Participants in full, the Sites Authority shall apportion the amount collected pro-rata based on the applicable Capacity Interest in each of the Base Facilities and/or Downstream Facilities as calculated in accordance with the Sites Operations Plan.

SECTION 7. SITES AUTHORITY FINANCIAL COVENANTS

7.1.1 The Sites Authority will keep appropriate accounting records in which complete and correct entries shall be made of all transactions relating to the Project, which records shall be available for inspection by each Participant upon at least 2 Business Days written notice, at reasonable hours and under reasonable conditions.

7.1.2 The Sites Authority will prepare within 270, or such other longer time period approved by the Sites Authority Board, days after the close of each Fiscal Year (commencing with the Fiscal Year ending [December 31, 2027]) financial statements of the Sites Authority for the preceding Fiscal Year prepared by a recognized independent auditor in accordance with Generally Accepted Accounting Principles, together with an accountant's report on such financial statements. The Sites Authority will promptly furnish a copy of such accountant's report to each Participant. If requested by Participants holding at least [_%] of the Base Facilities Capacity Interest, the independent auditor will also audit annual invoices for that fiscal year.

7.1.3 The Sites Authority will faithfully observe and perform all the agreements, conditions, covenants and terms contained in the Master Resolution required to be observed and performed by the Sites Authority and shall apply amounts received pursuant to this Contract in accordance with the Master Resolution.

7.1.4 The Sites Authority shall maintain all records related to the Project for a minimum period of 10 years after Completion, or, in the case of records related to any Project Obligations, for a period as required by the terms of such Project Obligations.

SECTION 8. LEASING, SALE, TRANSFER AND ASSIGNMENT OF CAPACITY INTERESTS AND SALES OF WATER

8.1 Lease of Capacity Interests by Participants

8.1.1 Subject to the special provisions for the SWP Participants in Appendix 9, Participants may lease Capacity Interests to other Storage Partners and to other entities subject to the following conditions:

(a) each Participant may negotiate in its discretion the commercial terms of the lease of its Capacity Interests ("**Lease Negotiated Terms**") provided that:

(i) the Lease Negotiated Terms must not negatively impact other Participants' rights to store or convey Water in accordance with this Contract, or the rights of Storage Partners to store or convey Water in accordance with the State and Federal Contracts (as applicable);

(ii) any lease of Capacity Interests must be consistent with the Sites Water Right, Governmental Approvals and Applicable Law;

(iii) subject to Section 8.1.2, a lease of Capacity Interest shall not impact or limit a Participant's rights or obligations to the Sites Authority under this Contract and each Participant shall remain responsible for all of its obligations to the Sites Authority under this Contract;

(iv) no lease of Capacity Interests can cause or be construed to cause a reduction in any Project Obligation bond credit rating or put the tax-exempt borrowing status of the Sites Authority in violation of the Internal Revenue Code of 1986, as amended, as reasonably determined by the Sites Authority;

(v) no agreement for a lease of a Participant's Capacity Interests shall be for a term of longer than 10 years, nor shall it provide for any renewal of a term in a manner that would result in a lease having an effective term in excess of 10 years, unless such lease and/or renewal exceeding 10 years is approved pursuant to the same procedure and conditions that apply to the sale of a Capacity Interest as provided in Section 8.2; provided, however, that the preceding 10-year limitation shall not apply to Colusa County's lease of storage for "creek water", as that term is described and used in the Colusa County / Sites Authority MOU. If any lease of Base Facilities Capacity Interest is to a Participant with a Downstream Facilities Capacity Interest, the Sites Water may be conveyed on a first priority basis up to the Downstream Facilities Capacity Interest. Should the Participant wish to convey more Sites Water than its Downstream Facilities Capacity Interest allows, this would be on a second priority basis and would incur wheeling costs on a per Acre-foot basis determined as described in the Operations Plan. Leases to non-Participants would be provided access to Downstream Facilities on a second priority basis and would incur wheeling costs on a per Acre-foot basis determined as described in the Operations Plan, which wheeling fee shall be credited to those holders of Downstream Facilities Capacity Interest who provided the Downstream Facilities capacity;

(vi) prior to any lease by a Participant of Base Facilities Capacity Interest and Downstream Facilities Capacity Interest, the leasing Participant shall provide to the Sites Authority such information and documents as reasonably requested by the Sites Authority, except for any commercial terms which may be held confidential from public disclosure in accordance with Applicable Law; and

(b) any lease of Base Facilities Capacity Interest and Downstream Facilities Capacity Interest (as applicable) shall be confirmed with staff of the Sites Authority to maintain proper accounting and verify that Project operations will not be adversely affected;

(c) any lease agreement for Capacity Interest must acknowledge that conveyance constraints will limit withdrawals from the Project Facilities from time to time, and must specify how Project Facilities losses will be accounted for between the lessee and lessor; and such provisions shall be consistent with this Contract, the then-current Sites Operations Plan and any other requirements established by the Reservoir Management Board and the Sites Authority;

(d) as a condition of any Participant leasing all or a portion of its Capacity Interest, the Participant must first pay any amounts due to the Sites Authority under this Contract and receive written confirmation of such from the Sites Authority;

(e) where a Participant proposes to lease Base Facilities Capacity Interest and Downstream Facilities Capacity Interest to a non-Storage Partner, and receives a bona fide offer for the same, the leasing Participant must first provide written notice of such offer ("Lease Offer Notice") to the other non-leasing Storage Partners holding a Capacity Interest in the same Project Facilities (the Base

Facilities or the Downstream Facilities, as applicable) including a term sheet with all material terms of the proposed lease, including, the duration of the lease. The Storage Partners shall have a "right of first refusal" with respect to the lease of such Capacity Interest on the terms provided in the Lease Offer Notice. Each Storage Partner shall respond to such terms in writing within 60 days of receipt of the Lease Offer Notice or such longer time proposed by the leasing Participant, and a failure to so respond shall be deemed a waiver of such Storage Partner's right to first refusal with regard to the transaction set forth in the Lease Offer Notice. If the terms presented to the Storage Partners in the Lease Offer Notice are changed in any material way following provision of the Lease Offer Notice to the non-leasing Storage Partners, the leasing Participant will provide a revised Lease Offer Notice and the non-leasing Storage Partners shall again have a "right of first refusal" on the new terms in the revised Lease Offer Notice. In the event that more than one non-leasing Storage Partner timely notifies the leasing Participant of such non-leasing Storage Partner's interest in leasing the Capacity Interest upon the terms set forth in the Lease Offer Notice, the Capacity Interest shall be apportioned pro-rata based on the non-leasing Storage Partner's applicable Capacity Interest in each of the Base Facilities and Downstream Facilities as calculated in accordance with the Sites Operations Plan unless the non-leasing Storage Partners agree otherwise. While the Sites Authority may act in an administrative role with respect to such leases, the Sites Authority will not have any authority to set prices or terms except as set forth in Section 8.1.1(a);

(f) the Participant must provide notice to the Sites Authority of the final lease within 5 days of execution and shall ensure that appropriate communication protocols are in place so that the Sites Authority is able to convey Water on behalf of the lessee; and

(g) Downstream Facilities Capacity Interest can only be leased to another Participant with Base Facilities Capacity Interest or to an entity leasing Base Facilities Capacity Interest.

8.1.2 In the event that a Participant leases its Base Facilities Capacity Interest and Downstream Facilities Capacity Interest as described in Section 8.1.1(a), such leasing Participant shall remain signatory to this Contract and shall continue to be liable and responsible for all of its obligations under this Contract, and shall not be relieved of any such obligations as a result of such lease.

8.1.3 The Participant leasing Capacity Interest shall receive Sites Authority and Reservoir Management Board approvals, as necessary, prior to executing any agreements for lease of Capacity Interest requiring such approvals under this Contract. The provisions for leasing specified in this Section 8.1 and Appendix 9, if applicable, constitute all provisions necessary for the Sites Authority Board and Reservoir Management Board approving a lease, and such approvals shall not be unreasonably withheld, conditioned or delayed.

8.2 Sale of Capacity Interest by Storage Partners

8.2.1 Subject to special provisions for the SWP Participants in Appendix 9, Participants may sell all or a portion of their Base Facilities Capacity Interest and/or

Downstream Facilities Capacity Interest to other Storage Partners and to other entities subject to the following conditions:

(a) each Participant may negotiate in its discretion the commercial terms of the sale of its Capacity Interest ("Sale Negotiated Terms") provided that:

(i) the Sale Negotiated Terms must not negatively impact other Participants' rights to store or convey Water in accordance with this Contract, or the rights of Storage Partners to store or convey Water in accordance with the State and Federal Contracts (as applicable);

(ii) any sale of Capacity Interest must be consistent with the Sites Water Right, Governmental Approvals and Applicable Law;

(iii) subject to Section 8.2.2, a sale of Capacity Interest shall not impact or limit a Participant's rights or obligations to the Sites Authority under this Contract and each Participant shall remain responsible for all of its obligations to the Sites Authority under this Contract;

(iv) no sale of a Participant's Capacity Interest can cause or be construed to cause a reduction in any Project Obligation bond credit rating or put the tax-exempt borrowing status of the Sites Authority in violation of the Internal Revenue Code of 1986, as amended, as reasonably determined by the Sites Authority;

(v) subject to Section 8.2.3, prior to any sale by a Participant of Capacity Interest, the selling Participant shall provide to the Sites Authority such information and documents as reasonably requested by the Sites Authority, except for any commercial terms which may be held confidential in accordance with Applicable Law; and

(vi) any sale must be approved by the Reservoir Management Board and the Sites Authority (as applicable) consistent with this Section 8.2.1(a) and the Sites Authority Bylaws, such approval not to be unreasonably withheld or delayed by the Sites Authority;

(b) any sale of Capacity Interest shall be confirmed with staff of the Sites Authority including (i) verifying that Project operations and Water accounting may be maintained; and (ii) providing notice of the proposed buyer's credit rating. Any sale to a party with a lower individual credit rating than the proposed seller that represents 5% or greater of all Base Facilities Capacity Interest or Downstream Facilities Capacity Interest, as applicable, will be subject to Sites Authority approval;

(c) any sale agreement for Capacity Interest must acknowledge that conveyance constraints will limit withdrawals from the Project Facilities from time to time, and must specify how Project Facilities losses will be accounted for; and such provisions shall be consistent with this Contract, the Sites Operations Plan and any other requirements established by the Reservoir Management Board and the Sites Authority;

(d) as a condition of any Participant selling all or a portion of its Capacity Interest, and of the Sites Authority signing the Contract with the purchaser of the Capacity Interest, the Participant must first pay any amounts due to the Sites Authority

under this Contract and receive written confirmation of such from the Sites Authority;

(e) where a Participant proposes to sell Capacity Interest to a non-Storage Partner, and receives a bona fide offer for the same, the selling Participant must first provide written notice of such offer ("Sale Offer Notice") to the other Storage Partners including a term sheet with all material terms of the proposed sale. The Storage Partners shall have a "right of first refusal" with respect to the sale of such Capacity Interest on the terms provided in the Sale Offer Notice. Each Storage Partner shall respond to such terms in writing within 60 days of receipt of the Sale Offer Notice or such longer time proposed by the selling Participant, and a failure to so respond shall be deemed a waiver of such Storage Partner's right to first refusal with regard to the transaction set forth in the Sale Offer Notice. If the terms presented to the Storage Partners in the Sale Offer Notice are changed in any material way following provision of the Sale Offer Notice to the non-selling Storage Partners, the selling Participant will provide a revised Sale Offer Notice and the non-selling Storage Partners shall again have a "right of first refusal" on the new terms in the revised Sale Offer Notice. In the event that more than one non-selling Storage Partner timely notifies the Selling Participant of such non-selling Storage Partner's interest in purchasing the Capacity Interest upon the terms set forth in the Sale Offer Notice, the Capacity Interest shall be apportioned pro-rata based on the non-selling Storage Partner's applicable Capacity Interest in each of the Base Facilities and Downstream Facilities as calculated in accordance with the Sites ~~Operarions~~Operations Plan unless the non-selling Storage Partners agree otherwise. While the Sites Authority may act in an administrative role with respect to such sales, the Sites Authority will not have any authority to set prices or terms except as set forth in Section 8.2.1(a); and

(f) the Participant must provide notice to the Sites Authority of the final sale within 5 days of execution.

8.2.2 In the event that a Participant sells all or a portion of its Capacity Interest as described in Section 8.2, such selling Participant shall remain liable and responsible for all of its obligations under this Contract related to such Capacity Interest until such time as the purchaser of such Capacity Interest has entered into this Contract.

8.2.3 If any Project Obligation under a Financing Agreement is outstanding (but only to the extent required under such Financing Agreement), any sale by a Participant of all or a portion of its Capacity Interest shall be subject to the terms of such Financing Agreement, including the right of the applicable Lender to consent to such sale, if any.

8.2.4 The Participant selling Capacity Interest shall receive Sites Authority and Reservoir Management Board approvals, as necessary, prior to executing any agreements for sale of Capacity Interest requiring such approvals under this Contract. The provisions for sale specified in this Section 8.2 and Appendix 9, if applicable, constitute all provisions necessary for the Sites Authority Board and Reservoir Management Board approving a sale, and such approvals shall not be unreasonably withheld, conditioned or delayed.

8.3 ~~Delivery of Sites Water via~~ Exchanges of Sites Water (Other than Exchanges under Section 8.4)

8.3.1 Subject to special provisions for the SWP Participants in Appendix 9, Participants may Exchange their Sites Water to other Storage Partners or other entities.

8.3.2 The terms of Exchanges of Sites Water are at the sole discretion of the Participant(s), provided that:

(a) terms must not negatively impact other Participants' rights as described in this Contract, the Sites Water Right or the rights of other Storage Partners as set out in their respective contracts;

(b) notice of any Exchange shall be provided to the staff of the Sites Authority so that Project operations and Water accounting may be maintained;

(c) any costs to the Sites Authority associated with any Exchange shall follow Beneficiary Pays Principles; and

(d) a Participant may not transfer or assign its Capacity Interest or any other rights or obligations under this Contract as part of any Exchange, except as set forth in Section 8.2.

8.3.3 Other Water may also be exchanged if the terms of any Exchange is consistent with Section 8.2.2 above, and otherwise meets all legal requirements.

8.4 Delivery of Sites Water via Exchanges of Sites Water with SWP or CVP ~~Supplies~~Water

8.4.1 The operation of the Project includes the potential for delivery of Sites Water to the Participants via operational exchanges of Sites Water with (i) DWR for the State Water Project water, or (ii) Reclamation for the Central Valley Project water, subject to the Sites Authority's separate agreements with DWR and Reclamation, respectively.

8.4.2 Subject to Applicable Law, any Participant that is a SWP contractor may request the Sites Authority to include that Participant's Sites Water in an exchange between the Sites Authority and DWR pursuant to the Sites-SWP Exchange Agreement, and the Sites Authority will facilitate such exchanges provided they are consistent with the requirements of the Sites-SWP Exchange Agreement.

8.4.3 Subject to Applicable Law, any Participant that is a CVP contractor may request the Sites Authority to include that Participant's Sites Water or Other Water in an exchange between the Sites Authority and Reclamation, and the Sites Authority will facilitate such exchanges provided they are consistent with a separate agreement(s) with Reclamation for such exchanges.

8.4.4 Sites shall not initiate or implement any operational exchange of Sites Water with SWP water or CVP water from a Participant's storage space (or by not diverting Sites Water into a Participant's storage space) without that Participant's written consent to the inclusion of its Sites Water in such operational exchange.

8.4.5 Any Participant that has consented to an operational exchange of its Sites Water with DWR or Reclamation under this Section ~~8~~8.4 shall bear all costs (monetary or otherwise), the risk of loss and any shortfall or reduction in Water caused by or incurred in the performance of such exchange.

8.5 Sale of Sites Water

8.5.1 Subject to special provisions for the SWP Participants in Appendix 9, Participants may sell their Sites Water to other Storage Partners or other entities.

8.5.2 The terms of sales of Sites Water are at the sole discretion of the Participant(s), provided that:

(a) terms must not negatively impact other Participants' rights as described in this Contract, the Sites Water Right or the rights of other Storage Partners as set out in their respective contracts;

(b) notice of any sale shall be provided to the staff of the Sites Authority so that Project operations and Water accounting may be maintained;

(c) any costs to the Sites Authority associated with any sale shall follow Beneficiary Pays Principles; and

(d) A Participant may not transfer or assign its Capacity Interest or any other rights or obligations under this Contract as part of any sale of Sites Water, except as set forth in Section 8.2.

8.5.3 Other Water may also be sold if the terms of any sale otherwise meet all legal requirements.

8.6 Maintenance of Tax-Exempt Status of Project Obligations

Notwithstanding any other provision of this Contract, no Participant shall sell any portion of its Capacity Interest, directly or indirectly, or effect a change in the ownership of its Capacity Interest in any other manner, or take or permit to be taken any other action or actions, which would result in any of Project Obligations being treated as an obligation not described in Section 103(a) of the Internal Revenue Code of 1986, as amended, by reason of classification of such Project Obligations as a "private activity bond" within the meaning of Section 141 of said Code or for any other reason; provided, however, that in the event a Sites Financing is accomplished under terms that make the Interest thereon subject to federal income taxation, the foregoing restrictions will be inapplicable to the portion of the Project so financed.

SECTION 9. MODIFICATIONS FOR CAPITAL IMPROVEMENTS

9.1 Subject to Section 9.2, the Sites Authority or any Participant may request capital improvements to provide an added benefit to the Project. Such capital improvements shall be subject to approval by the Sites Authority and the Participants in accordance with Section 4.12. The Sites Authority will prepare and distribute a document detailing the anticipated Project Costs and benefits of the proposed capital improvements.

9.2 Participants may not opt out of costs of necessary capital improvements required to maintain initial Project functions and that provide benefits initially contemplated for the Project.

9.3 In the event that such proposed capital improvements are not approved in accordance with Section 4.12, a subset of Participants may elect to continue with the capital improvements. Those Project Costs and benefits associated with such capital improvements shall be allocated only to the subset of Participants electing to proceed with the capital improvements in accordance with an agreement among the Sites Authority and such Participants.

SECTION 10. DEFAULT

10.1 Written Demand

10.1.1 Subject to special provisions for the SWP Participants in Appendix 9, if a Participant fails to (i) make any payment in full when due under this Contract or (ii) perform any other obligation under this Contract, the Sites Authority shall make written demand upon such Participant. If a failure described in this Section 10.1.1 is not remedied within 30 days from the date of such demand, such failure shall constitute a default at the expiration of such period; provided that if a failure described in Section 10.1.1(ii) cannot be remedied within 30 days from the date of such demand but (A) the defaulting Participant commences remedial action within such 30-day period and diligently pursues the remedy of such default until the remedy is complete and (B) such failure is remedied within 90 days from the date of the initial demand, such failure shall not constitute a default under this Contract. Notice of any such demand shall be provided to each other Participant by the Sites Authority.

10.1.2 Upon failure of the Sites Authority to perform any obligation of the Sites Authority under this Contract, a Participant may make written demand upon the Sites Authority. If such failure is not remedied within 30 days from the date of such demand, such failure shall constitute a default at the expiration of such period. Notice of such demand shall be provided to all other Participants and the Acquirer by the Participant making such written demand.

10.1.3 In addition to any default resulting from breach by the Sites Authority or a Participant of any agreement, condition, covenant or term of this Contract, if the Sites Authority or a Participant files any petition or institutes any proceedings under any law, state or federal, dealing with or relating to the subject of bankruptcy or insolvency or under any amendment of such law, either as a bankrupt, as an insolvent, as a debtor or in any similar capacity, wherein and whereby the Sites Authority or a Participant asks or seeks or prays to be adjudicated as bankrupt, or is to be discharged from any or all of its debts or obligations, or offers to its creditors to effect a composition or extension of time to pay its debts, or asks, seeks or prays for a reorganization or to effect a plan of reorganization or for a readjustment of its debts or for any other similar relief, or if the Sites Authority or a Participant shall make a general or any assignment for the benefit of its creditors, then, in each and every such case, the Sites Authority or such Participant, as applicable, shall be deemed to be in default under this Contract.

10.2 Suspension or Termination of Rights; Continuing Obligations

10.2.1 Upon the occurrence and continuance of a default as provided in Section 10.1.1 or in Section 10.1.3, Reservoir Management Board or the Sites Authority Board (as applicable), may give notice of suspension or termination of the defaulting Participant's:

(a) right to participate or vote as a member of the Reservoir Management Board;

(b) Capacity Interest, such Participant's interest in Water and such Participant's right to convey Water; and/or

(c) right to the services obligated to be provided by the Sites Authority relating to the operation of the Sites Project, as provided in the Sites Operations Plan,

which notice shall be effective within 30 days after receipt unless such termination or suspension shall be enjoined, stayed or otherwise delayed by judicial action. The Sites Authority Board shall make determinations under this Section 10.2 pertaining to the Sites Authority Board and the Reservoir Management Board, and the Reservoir Management Board shall make determinations under this Section 10.2 pertaining to the Reservoir Management Board. In the event of a suspension under this Section 10.2.1, the suspension shall remain in effect until the default has been cured to the reasonable satisfaction of the Sites Authority Board or the Reservoir Management Board, as applicable, and notice of such cure and termination of the suspension has been provided to the Participant.

10.2.2 Irrespective of such suspension or termination, the defaulting Participant shall remain liable to the Sites Authority to pay the full amount of Project Costs allocated to such Participant in accordance with Section 6; provided that the Sites Authority shall act reasonably and in good faith to mitigate any damages caused by such Participant's default.

10.3 Disposition of Defaulting Participant's Capacity Interest, Interest in Water and Right to Convey Water

10.3.1 Upon a default and the termination of such Participant's Capacity Interest in accordance with Section 10.2.1(b), the Sites Authority shall use commercially reasonable efforts to facilitate a sale, for such Participant's account, of all or a portion of the Participant's Capacity Interest, interest in Water and right to convey Water (the "**Defaulted Interests**") for all or a portion of the remainder of the term of this Contract.

10.3.2 The other non-defaulting Storage Partners holding a Capacity Interest in the same Project Facilities (the Base Facilities and/or the Downstream Facilities, as applicable) shall have a "right of first offer" to assume all or a portion of the defaulting Participant's Defaulted Interests and that Participant's related obligations under this Contract, at a price mutually agreed between the defaulting Participant and the Storage Partner purchasing all or a portion of the defaulting Participant's Defaulted Interests. In the event that more than one non-defaulting Storage Partner wish to acquire the Defaulted Interests on the same terms, the Defaulted Interests shall be apportioned pro-rata based on the non-defaulting Storage Partner's applicable Capacity Interest in each of the Base Facilities and/or Downstream Facilities as calculated in accordance with the Sites Operations Plan unless the non-defaulting Storage Partners agree otherwise.

10.3.3 Subject to Section 10.3.4, in the event that the Sites Authority is unable to facilitate a sale of all of the defaulting Participant's Capacity Interest, interest in Water and right to convey Water to other non-defaulting Storage Partners in accordance with Section 10.3.2, the Sites Authority may make such Defaulted Interests available to entities other than the non-defaulting Participants, and may enter into an agreement with such entities for the purchase of all or a portion of the defaulting Participant's Defaulted Interests and the assumption of the related obligations under this Contract.

10.3.4 If any Project Obligation under a Financing Agreement is outstanding (but only to the extent required under such Financing Agreement), any sale of a defaulting Participant's Capacity Interest to entities other than the non-defaulting Storage Partners shall be subject to the terms of such Financing Agreement, including the right of the applicable Lender to consent to such sale, if any.

10.3.5 Notwithstanding any other provisions of this Contract, and to the extent applicable, the Sites Authority shall not facilitate a sale of any portion of a defaulting Participant's Defaulted Interests, directly or indirectly, in any manner that would adversely affect the exclusion from gross income of interest on any Sites Financing for federal income tax purposes.

10.3.6 In the event that the Sites Authority is unable to enter into an agreement with entities for the purchase of all or a portion of the defaulting Participant's Defaulted Interest and the assumption of the related obligations under this Contract under Section 10.3.3, the Defaulted Interests shall, subject to Section 10.3.7, be apportioned pro-rata based on the remaining non-defaulting Participants' applicable Base Facilities Capacity Interest and/or the Downstream Facilities Capacity Interest as calculated in accordance with the Sites Operations Plan unless (i) the non-defaulting Participants agree to an alternative apportionment of such Defaulted Interests; or (ii) any non-defaulting Participants agreed to assume all or a portion of the defaulting Participant's Defaulted Interests under Section 10.3.2, in which case the maximum pro-rata share apportioned to such Participant shall be the difference (if any) between the proposed pro-rata apportionment under this Section 10.3.6 and any amount assumed under Section 10.3.2. Notwithstanding the relevant apportionment agreed among the non-defaulting Participants, the foregoing re-allocation will result in a proportional increase in each Participant's Capacity Interest and the related rights and obligations, but in no event shall such re-allocation result in less than 100% of the total Capacity Interests and related rights and obligations (including the defaulting Participant's Defaulted Interest) being allocated among (iii) non-defaulting Participants and (iv) such other entities to which the Sites Authority has successfully transferred such Capacity Interest.

10.3.7 A non-defaulting Participant's pro-rata share apportioned under Section 10.3.6 may not be increased by more than 50% of the Participants' applicable Base Facilities Capacity Interest and/or the Downstream Facilities Capacity Interest (excluding any Base Facilities Capacity Interest and/or the Downstream Facilities Capacity Interest voluntarily acquired under Section 10.3.2 by such non-defaulting Participant)

10.3.8 Notwithstanding that all or any portion of the defaulting Participant's Capacity Interest, interest in Water and right to convey Water is so sold, such Participant shall remain liable to the Sites Authority to pay the full amount of its share of costs under this Contract as if such sale has not been made, except that such liability shall be discharged to the extent that the Sites Authority shall receive payment from the buyer thereof for that share of costs.

10.4 Enforcement of Remedies

10.4.1 In addition to the other remedies set forth in this Section 10, upon the occurrence of an event of default in accordance with this Contract, any Party shall be entitled to proceed to protect and enforce the rights vested in such Party by this Contract by such appropriate judicial proceeding as such Party shall deem most effectual, either by suit in equity or by action at law, whether for the specific performance of any covenant or agreement contained herein or to enforce any other legal or equitable right vested in such Party by this Contract or by law. The provisions of this Contract and the duties of each Party, their respective boards, officers or employees shall be enforceable by the other Parties by mandamus or other appropriate suit, action or proceeding in any court of competent jurisdiction, with the losing Party paying all costs and attorney fees of the prevailing Party.

10.4.2 Without limiting the generality of the foregoing, the Sites Authority, the Participants or Acquirer, as applicable, shall have the right to bring the following actions:

(a) Accounting. By action or suit in equity to require the Sites Authority Board or the Participants, its officers and employees and its assignee to account as the trustee of an express trust.

(b) Injunction. By action or suit in equity to enjoin any acts or things which may be unlawful or in violation of the rights of any Party.

(c) Mandamus. By mandamus or other suit, action or proceeding at law or in equity to enforce its rights against the other Party hereto (and its board, officers and employees) and to compel the other Party hereto to perform and carry out its duties and obligations under the law and its covenants and agreements as provided herein.

(d) Specific Performance. By action or suit in equity to compel a Party to specifically perform under this Contract, including, without limitation, to uphold Section 4.12.1 of this Contract

10.5 Waiver

10.5.1 The waiver by any Party of any breach by any other Party of any agreement, condition, covenant or term under this Contract shall not operate as a waiver as to any subsequent breach of the same or any other agreement, condition, covenant or term under this Contract.

SECTION 11. TERMINATION

11.1 Termination Because of Infeasibility

11.1.1 Without limiting Section 11.1.2, this Contract may be terminated in the following manner:

(a) If the Sites Authority and the Reservoir Management Board determine, in accordance with Section 4.12 (including as provided in Section 3.1), that the Project is required to be terminated because of infeasibility, impracticality, inability, failure of the Participants to fund the Project as provided in Section 6, or

failure of the Sites Authority to construct the Project as provided in Section 3, the Sites Authority shall adopt a resolution to wind-up the Project (a "**Wind-Up Resolution**").

(b) Upon adoption of a Wind-Up Resolution by the Sites Authority, and subject to compliance with Partner Agreements, State and Federal Contracts, and the Proposition 1 Water Storage Investment Program Funding Agreement, the Sites Authority shall first offer to sell the Project Assets to the Storage Partners (excluding the Partner Facilities, at a fair market value as determined by a majority of a panel of 3 licensed appraisers, including (i) any partially constructed or completed physical works or assets that divert Sites Water into or release Sites Water from the Sites Owned Facilities and (ii) any other non-physical rights, interests, or obligations related to the Project. If any Storage Partners accept such offer for any or all of the offered interests, then the Sites Authority and such purchasing Storage Partners shall work in good faith to close upon the sale of such interests within 180 days after the appraiser panel's determination of fair market value.

(c) Upon adoption of a Wind-Up Resolution by the Sites Authority, the Sites Authority shall appoint a winding-up agent (the "**Winding-Up Agent**"). The Winding-Up Agent shall, upon expiration of the time for the Storage Partners to accept the offer described in Section 11.1.1(b), prepare a plan for disposition of the Project Assets, which shall include plans for mitigating or remediating any hazardous or unsafe conditions located on the Project site that are a direct result of the construction of the Project, and upon approval of the Sites Authority, implement the disposition of the Project Assets in accordance with the plan for disposition, including the disposition of unexpended and unobligated funds of the Sites Authority and the Storage Partners. Non-cash assets shall be liquidated by the Winding-Up Agent in a commercially reasonable manner. Proceeds from the disposition of Project Assets and any other cash or cash equivalents then held by the Sites Authority shall first be used, based on the Pro-rata Cost Share, to pay the following amounts in the following order of priority (i) repay debts of the Sites Authority incurred for funding the Project; provided, however, that any moneys contributed by a Self-Funding Participant and held at the time of a winding-up shall not be used to repay debts of the Sites Authority incurred for funding the Project, (ii) pay the costs of mitigating or remediating hazardous or unsafe conditions located on the Project site pursuant to the plan for disposition of the Project Assets, and (iii) distribute cash to the Participants that had satisfied their capital funding obligations in accordance with Section 6, provided that any unexpended funds which the Sites Authority received from Storage Partners will be returned to the applicable Storage Partner. Any remaining funds shall then be distributed to the Storage Partners based on their Pro-rata Cost Share. Subject to the Sites Authority Records Management Policy, Storage Partners shall be entitled to copies of any work products developed by the Sites Authority or its consultants on behalf of the Storage Partners, and the Sites Authority shall convey to the Storage Partners, as tenants in common with all other Storage Partners who are not in default of this Contract, a pro-rata interest based on the Pro-rata Cost Share in all real and personal property remaining after implementation of the plan for disposition of the Project Assets in accordance with this Section 11.1.

(d) Upon completion of the winding-up process described in this Section 11.1, the Sites Authority shall adopt a resolution of termination of the Project. Upon the adoption of such resolution, all Capacity Interests shall be terminated.

11.1.2 Notwithstanding any other provision of this Contract, so long as any Project Obligation under a Financing Agreement is outstanding (but only to the extent required under such Financing Agreement), the termination of this Contract (including under Section 11.1.1 or Section 11.2) shall be subject to the terms of such Financing Agreement, including the right of the applicable Lender to consent to such termination, if any.

11.2 Acquirer Termination

The Acquirer may terminate its role under this Contract upon the Acquirer's good faith determination that continued participation materially adversely impacts the SWP or SWP contractors that are not SWP Participants, as further described in Appendix 9. Upon such termination, SWP Participants shall convert to direct Participant status and assume corresponding direct rights and obligations under this Contract.

SECTION 12. DISPUTE RESOLUTION

12.1 Informal Dispute Resolution before Mediation

12.1.1 The Participants, the Sites Authority and the Acquirer (as applicable to their rights, obligations and liabilities under this Contract) agree to undertake good faith efforts to resolve any dispute arising in connection with this Contract by meeting within 60 days after the date that notice of such dispute is provided in writing prior to resorting to formal means of dispute resolution, including disputes related to the Sites Operations Plan.

12.1.2 If any dispute is not capable of resolution by and among the representatives of the Participants, Sites Authority and the Acquirer authorized to administer this Contract, the authorized representative of the applicable Participants, the authorized representative of the Acquirer, as applicable, and the Sites Authority's Board Chair or his/her authorized representative (who shall be the Executive Director of the Sites Authority or a member of the Sites Authority Board) shall meet and confer in an effort to resolve any such dispute.

12.1.3 If such efforts between the applicable Participants' principals, the Sites Authority's designee and the Acquirer's designee do not resolve the dispute within [60] days after the commencement of a meeting described in Section 12.1.1, the applicable Participants, the Sites Authority and the Acquirer shall have such other remedies available to them as are provided for in this Contract or as otherwise exist at law or in equity.

12.1.4 No other means of dispute resolution, including mediation, arbitration and litigation, shall be available to the Participants, the Sites Authority and the Acquirer unless they have exhausted the process provided for in this Section 12.1.

12.2 Mediation

12.2.1 If a dispute arises among one or more Participants, the Sites Authority and the Acquirer relating to or arising from a Party's rights or obligations under this Contract that cannot be resolved through informal discussions and meetings as described in Section 12.1, the

Parties involved in the dispute shall be required to first endeavor to settle the dispute in an amicable manner, using mandatory non-binding mediation under the rules of JAMS, AAA, or any other neutral organization agreed upon by the Parties before having recourse in a court of law. Mediation shall be commenced by sending a notice of demand for mediation to the other Parties involved in the dispute.

12.2.2 A single mediator that is acceptable to all Parties involved in the dispute shall be used to mediate the dispute. The mediator will be knowledgeable in the subject matter of this Contract, if possible, and chosen from lists furnished by JAMS, AAA, or any other agreed-upon mediator.

12.2.3 The expenses of witnesses for either side shall be paid by the Party producing such witnesses. All mediation costs, including required travel and other expenses of the mediator, and the cost of any proofs or expert advice produced at the direct request of the mediator, shall be equally shared by the Parties to the dispute unless otherwise directed by the mediator.

12.3 Conduct of Mediation

12.3.1 Mediation will be conducted in an informal manner. Discovery shall not be allowed except in accordance with the Public Records Act. The discussions, statements, writings and admissions and any offers to compromise during the proceedings will be confidential to the proceedings (pursuant to California Evidence Code §§ 1115 —1128; 1152) and will not be used for any other purpose unless otherwise agreed by the applicable Parties in writing. The applicable Parties may agree to exchange any information they deem necessary.

12.3.2 The Parties involved in the dispute shall have representatives attend the mediation who are authorized to settle the dispute, though a recommendation of settlement may be subject to the subsequent approval of each Party's governing body. Any involved Party may have attorneys, witnesses or experts present.

12.3.3 Any resultant agreements from mediation shall be documented in writing. The results of the mediation shall not be final or binding unless otherwise agreed to in writing by the Parties to the dispute. Mediators shall not be subject to any subpoena or liability and their actions shall not be subject to discovery.

12.4 Nothing in this Section 12 shall relieve the Parties from performing their obligations under this Contract. The Parties shall be required to comply with this Contract, including the performance of all disputed activity and disputed payments, pending the resolution of any dispute under this Contract.

12.5 Any offers to compromise before or after mediation proceedings will not be used to prove a Party's liability for loss or damage unless otherwise agreed by the Parties in writing (pursuant to California Evidence Code §1152).

SECTION 13. LIABILITY

13.1 Sites Authority Liability

Any and all obligations of the Sites Authority that may arise under this Contract, whether financial or otherwise, shall be payable solely from the revenues, income, rents and

receipts earned by the Sites Authority. Nothing in this Contract shall be deemed to prevent the Sites Authority from making any payments from any other legally available source. In no event shall the Sites Authority be required to spend any money from revenue from taxes, assessments, fees or charges in violation of Applicable Law or Governmental Approvals in the performance of its obligations under this Contract. The obligations of the Sites Authority under this Contract do not constitute a debt or indebtedness of the Sites Authority within the meaning of any constitutional or statutory provision or limitation, and shall not be considered or held to be a general obligation of the Sites Authority.

13.2 Participant Liability

In no event shall any Participant be required to spend any money from taxes in violation of Applicable Law or Governmental Approvals in the performance of its obligations under this Contract.

13.3 Consequential Damages

No Participant shall be liable to another Participant or to the Sites Authority, and the Sites Authority shall not be liable to the Participants for consequential, indirect, punitive, or special damages arising under this Contract.

SECTION 14. INSURANCE

14.1 The Sites Authority will procure and maintain or cause to be procured and maintained, at a minimum, the following insurance with responsible insurers in such amounts and against such risks (including damage to or destruction of the Project Assets) as are usually covered in connection with facilities that are similar to the Project Assets (so long as such insurance is commercially available from reputable insurance companies at reasonable rates): (a) insurance on the Project Assets, excluding coverage for earthquake damage or destruction; (b) workers' compensation insurance in statutorily-prescribed amounts; and (c) commercial general liability insurance covering against claims of bodily injury and property damage. The Participants and the Acquirer shall be named as additional insureds under all insurance policies maintained pursuant to this section, and such insurance policies shall be primary and noncontributing with any and all insurance carried by the Participants or the Acquirer.

SECTION 15. MISCELLANEOUS

15.1 Relationship of Parties

In the exercise of their respective rights and obligations under this Contract, the Sites Authority, the Participants and the Acquirer each act in an independent capacity, and none is to be considered the officer, agent, contractor or employee of another.

15.2 Severability

15.2.1 Without limiting the application of Sections 4.12(g) and 4.12(h), if any provision or part of this Contract is ruled invalid (including, without limitation, invalidity of the Sites Authority and Reservoir Management Board governance structure provided for in this Contract,

the JPA Agreement and Sites Authority Bylaws due to court order or any change in law) by a court having proper jurisdiction, then the Parties shall:

(a) promptly meet and make efforts to negotiate a substitute for such provision or part, which shall, to the greatest extent legally permissible, effect the original intent of the Parties, including (as applicable) an appropriate assignment of duties to the members of the Reservoir Management Board, and other adjustments to obligations to be performed or payments to be made in accordance with this Contract to account for any change in the services rendered in accordance with this Contract resulting from such invalidated portion; and

(b) if necessary or desirable, apply to the court or other decision maker (as applicable) that declared such invalidity for an interpretation of the invalidated portion to guide the Parties' negotiation.

15.2.2 The invalidity or unenforceability of any such provision or part shall not affect the validity or enforceability of the balance of this Contract, which shall be construed and enforced as if this Contract did not contain such invalid or unenforceable provision or part.

15.3 Notices

15.3.1 Any notices required or permitted under this Contract shall be in writing and sufficiently given if made in writing and (a) delivered personally, (b) sent by registered or certified mail, postage prepaid, or (c) sent by email communication, in each case addressed to the respective Parties at the addresses indicated in the Project Specific Information. Notice required to be given to all Participants and/or the Acquirer under this Contract shall be given to the addresses indicated in the Project Specific Information or to such other addresses as the Participants may provide to the Sites Authority, the other Participants and the Acquirer from time to time.

15.3.2 Any Participant or the Acquirer may from time to time change the address to which notice may be provided by providing notice of the change to the Sites Authority who will update the address in the Project Specific Information to reflect such change.

15.4 Other Agreements Not Prohibited

Other agreements by and between the Parties of this Contract or any other entity are neither prohibited nor modified in any manner by execution of this Contract.

15.5 Assignment

15.5.1 The Sites Authority may pledge and assign to any Lender or trustee for bonds or other Financing Agreements, all or any portion of the payments received under this Contract from each Participant (other than payments from a Self-Funding Participant) and the Sites Authority's other rights and interests under this Contract. Each Participant hereby consents to such pledge and assignment. Such pledge and assignment by the Sites Authority shall be made effective for such time as the Sites Authority shall determine and otherwise as required under the relevant Financing Agreement and provide that the applicable Lender or trustee under the terms set forth in such Financing Agreement shall have the power to enforce this Contract in accordance with Section 15.15.2 in the event of a default by the Sites Authority under such Financing Agreement.

15.5.2 Except as otherwise provided in Section 15.5.1, the rights, titles, and interests of any Party to this Contract shall not be assignable or transferable without the consent of the Sites Authority and the governing body of each Party to this Contract.

15.6 Section Headings

The section headings in this Contract are for convenience of the Parties only, and shall not be deemed to govern, limit, modify or in any manner affect the scope, meaning or intent of the provisions or language of this Contract.

15.7 Governing Law and Venue

This Contract shall be governed by and construed in accordance with the laws of the State of California, any applicable federal law, the JPA Agreement, the Sites Authority Bylaws and the ordinances, regulations, codes, and executive orders enacted and/or promulgated pursuant thereto. The venue for any litigation between the Parties from any dispute arising in connection with this Contract shall be in the County of Colusa.

15.8 Construction of Language

It is the intention of the Parties to this Contract that if any provision of this Contract is capable of two constructions, one of which would render the provision void and the other of which would render the provision valid, then the provision shall have the meaning which renders it valid.

15.9 Successors

This Contract shall be binding upon and inure to the benefit of ~~the Sites Authority and~~ each ~~Participant~~Party and each of their permitted successors, assigns, and legal representatives.

15.10 Enforcement

The Parties are hereby authorized to take any and all legal or equitable actions, including an injunction and specific performance, necessary or permitted by law to enforce this Contract. Without limiting the generality of the foregoing, the Parties agree that specific performance shall be an available remedy in the event of a breach for failure to uphold Section 4.12.1 of this Contract regarding the Sites Authority's governance structure, including the delegation of the exclusive decision-making authority to the Reservoir Management Board for activities specifically identified in the Sites Authority Bylaws.

15.11 Integration

This Contract, together with its incorporated documents and references, constitutes the entire agreement and understanding of the Parties and supersedes all prior agreements and understandings between the Parties relating to the subject matter of this Contract. Except as expressly provided in this Contract, this Contract may not be interpreted, modified or changed by reference to other documents, understandings or agreements, whether written or oral, unless the interpretation, modification or change is subsequently agreed to in writing by the Parties to this Contract.

15.12 Amendment

15.12.1 Except as otherwise may be provided in this Contract, including Section 3.6, neither this Contract nor any provision under this Contract may be modified or amended except with the written consent of (1) the Sites Authority, (2) at least 75% of the weighted vote of the Participants as specified in the Sites Authority Bylaws; provided, however, that:

(a) if any Financing Agreement is outstanding, any amendment to this Contract will be subject to the terms and conditions set forth in any such Financing Agreement;

(b) this Contract may not be amended without a Participant's written consent if the Contract is to be amended in a manner that results in a material adverse impact on the rights of such Participant under this Contract to control its Capacity Interest or have Water diverted into, stored in, or released from the Project Facilities under its Capacity Interest on a pro-rata and substantially similar basis with other Participants;

(c) this Contract may not be amended in a manner that would cause the Sites Authority to violate Applicable Law or provisions of any Governmental Approvals; and

(d) the Acquirer's prior written consent shall be required for any amendment to Sections 1.1.1(c), 1.3, 8.4, and 11.2 of the Contract.

15.12.2 If at any time a Party believes that, due to any significant change in circumstances, compliance with this Contract by such Party would produce grossly inequitable results or subject it to financial hardship of extraordinary magnitude, such Party may by written notice call on the Reservoir Management Board to review and discuss the effects of such change of circumstances. Within 30 days after receipt of such notice, the Reservoir Management Board shall meet to consider how to deal with such inequities or hardship in a manner which is fair for all Parties in view of all changes and circumstances, and shall attempt to eliminate promptly any such inequity or hardship through good faith negotiations. If the Parties agree on a method to eliminate such inequity or hardship, then this Contract shall be amended in accordance with Section 15.12.1, as appropriate, except as provided in Section 15.12.3.

15.12.3 The Sites Authority shall enforce the provisions of this Contract and duly perform its covenants and agreements contained in this Contract. The Sites Authority will not consent or agree to or permit any rescission of or amendment to or otherwise take any action under or in connection with this Contract which will in any manner materially impair or materially adversely affect the rights of the Sites Authority under this Contract or the rights of the members of the Reservoir Management Board or the Participants.

15.13 Authorization and Opinion

15.13.1 Each Participant attaches to this Contract a true and correct copy of such Participant's records authorizing the officers, whose names appear on this Contract, to enter into this Contract.

15.13.2 Each Participant further attaches an opinion of an attorney or firm of attorneys as described in Section 2.1.1(b).

15.14 Counterparts; Electronic Execution

This Contract may be executed in several counterparts, each of which shall be deemed an original, but all of which together shall constitute one and the same instrument. Signatures may be delivered by facsimile transmission or by e-mail in a portable document format (e.g. "pdf," "tif," "jpg" or "DocuSign") or other electronic format and the signatures on such copies shall be deemed to be effective and valid as original signatures.

15.15 Third-Party Beneficiaries

15.15.1 All of the covenants contained in this Contract are for the express benefit of each Party, and any Participant shall have the right as a third-party beneficiary to initiate and maintain suit to enforce the obligations of other Participants hereunder. Except as provided by this Section 15.15, this Contract is not intended to benefit any third parties, and any other third-party beneficiaries are expressly disclaimed.

15.15.2 Notwithstanding Section 15.5.1, any Lender shall have the right as a third-party beneficiary to initiate and maintain suit to enforce this Contract to the extent provided in any Project Obligations or Financing Agreement. Without limiting the generality of the foregoing, so long as any Project Obligation under a Financing Agreement is outstanding (but only to the extent provided under such Financing Agreement), and only while such Financing Agreement is in effect, upon the occurrence of an event of default under such Financing Agreement, the applicable Lender, under the terms of such Financing Agreement, may exercise the enforcement rights in Section 10 of this Contract, including but not limited to the right to enforce any invoicing made by the Sites Authority to a Participant in accordance with this Contract. Each Participant hereby consents to such Lender's rights as a third-party beneficiary under this Contract as provided in this Section 15.15.2.

15.16 Advice of Counsel

The Parties acknowledge that they have the right to be advised by counsel with respect to the negotiations, terms, and conditions of this Contract, and that the decision of whether or not to seek the advice of counsel with respect to this Contract is a decision which is the sole responsibility of each of the Parties. This Contract is the product of negotiation and ~~therefor~~therefore shall not be construed against any Party.

15.17 Compliance with Laws and Financing Agreements

15.17.1 The Parties shall comply with all Applicable Law and Governmental Approvals.

15.17.2 Prior to the execution and delivery of a Financing Agreement by the Sites Authority, the Sites Authority shall provide the Participants with a substantially final draft of such Financing Agreement (but only to the extent required under such Financing Agreement). If required as a condition to the effectiveness of such Financing Agreement, each Financing Participant participating in the Sites Financing to which such Financing Agreement relates shall provide acknowledgment of (a) the receipt of such Financing Agreement and (b) such other

matters as required by such Financing Agreement, including without limitation, the pledge and assignment by the Sites Authority to the applicable Lender, the applicable Lender's right to enforce this Contract as a third-party beneficiary, other various consent rights of the applicable Lender described in this Contract, as applicable, and other rights of the applicable Lender as they may relate to this Contract and the rights and obligations of the Parties, in each case as set forth in such Financing Agreements.

15.17.3 Each Financing Participant participating in the Sites Financing to which any Financing Agreement relates and the Sites Authority shall cooperate with any Lender with third party beneficiary rights with respect to this Contract in enforcing compliance with the terms of this Contract (including the requirements set forth in Section 15.17.2).

SIGNATURES ON FOLLOWING PAGE(S)

IN WITNESS WHEREOF, the Parties have caused this Contract to be executed and attested by their proper officers duly authorized on the day and year set forth below, making this Contract effective on the Effective Date.

SITES PROJECT JOINT POWERS AUTHORITY

By:_____
Name:
Title:

[INSERT PARTICIPANT]

By:_____
Name:
Title:

STATE OF CALIFORNIA DEPARTMENT OF WATER RESOURCES

By:_____
Name:
Title:

[INSERT PARTICIPANT]

By:_____
Name:
Title:

GENERAL COUNSEL TO THE STATE OF CALIFORNIA DEPARTMENT OF WATER RESOURCES, as to form and sufficiency

By:_____
Name:
Title:

[INSERT PARTICIPANT]

By:_____
Name:
Title:

[INSERT PARTICIPANT]

By:_____
Name:
Title:

APPENDIX 1

DEFINITIONS

Unless the context otherwise requires, definitions for certain capitalized acronyms, abbreviations and terms used in this Contract have the meanings given in this Appendix 1.

AAA: Means American Arbitration Association.

Acre-foot: Means 43,560 cubic feet of water.

Acquirer: Means DWR, acting as acquirer of certain capacity rights in the Sites Reservoir Project as described in the Project Specific Information, including the associated Sites Water, in accordance with California Water Code Section 11575 and/or other Applicable Law to meet needs of the SWP Participants and otherwise responsible for performing the functions set out in Section 1.3 and Appendix 9 of this Contract.

Applicable Law: Means applicable federal, state and local laws, ordinances, rules, regulations, orders, and policies relating to the Project.

Approved Design Documents: Means for each of the anticipated Sites Owned Facilities, the most recently approved submittal of the Design Documents or final Design Documents prepared by the applicable designer and approved by the Sites Authority.

Associate Member: Has the meaning given in the Sites Authority Bylaws.

Available Downstream Capacity: Means Downstream Facilities Capacity Interest not utilized by the applicable Participant and made available for temporary use by other Storage Partners (or the Authority for conveyance under the Contracts for the Administration of Public Benefits), such approval not to be unreasonably withheld, conditioned, or delayed.

Base Facilities: Means the Sites Owned Facilities or other facilities available to all Storage Partners including those listed in the Project Specific Information, as modified from time to time.

Base Facilities Capacity Interest: Means the undivided capacity right of each Storage Partner to (i) store, convey and divert Water in each of the Sites Owned Facilities granted by the Sites Authority and owned by the Storage Partners in accordance with Section 3.5, and (ii) ability to utilize Partner Facilities through the Sites Authority to convey and divert Water for the Project, in the pro-rata share set out for each Storage Partner in the Project Specific Information, as modified from time to time and subject to the Sites Water Right, Applicable Law and Governmental Approvals.

Beneficiary Pays Principles: Means the principle for allocating all costs associated with delivering certain Project benefits, including public and non-public benefits, to the party receiving such benefits.

Billing Party(ies): Has the meaning given in Section 6.2.1.

Billing Statement: Has the meaning given in Section 6.3.

Business Day: Means a day other than (i) a Saturday or Sunday, (ii) a day which the Sites Authority offices are officially closed, and/or (iii) a day which banks are required or authorized by law to be closed in the State of California.

Capacity Interests: Means (i) in the case of the Base Facilities, the Base Facilities Capacity Interest; and (ii) in the case of the Downstream Facilities, the Downstream Facilities Capacity Interest, or either of them as the context requires.

Capital Improvement Plan: Has the meaning given in Section 4.15.1.

CEQA: Has the meaning given in Recital D to this Contract.

Colusa County / Sites Authority MOU: Means that certain Memorandum of Understanding between the Sites Authority and Colusa County dated on or about November 22, 2021.

Completion: Means the determination by the Sites Authority Board and the Reservoir Management Board that the Project Facilities are complete for the purposes of providing water service, including water storage, intake, outlet, and conveyance, to Storage Partners.

Construction: Means all work to build or construct, rehabilitate, upgrade, make, form, manufacture, furnish, install, supply, deliver, landscape, equip, test and commission any structure, building, or other improvement to real property included in the Project.

Construction Contract: Means a contract between the Sites Authority and a contractor to perform Construction work for all or a portion of the Project.

Contract: Means this Sites Reservoir Benefits & Obligations Contract, including all Appendices and Exhibits as described in Section 1.1.1, as such Contract may be modified from time to time in accordance with this Contract.

Contracts for the Administration of Public Benefits ("CAPB Contracts"): Means the agreement between the Sites Authority and DWR; anticipated to be titled Proposition 1 Water Storage Investment Program Contract for Administration Of Public Recreation, Flood Control, and Emergency Response Benefits, and the agreement between the Sites Authority and CDFW anticipated to be titled Proposition 1 Water Storage Investment Program Contract for Administration of Public Ecosystem Benefits, or each of them as the context requires.

Defaulted Interest: Has the meaning given in Section 10.3.1.

Delivery Point: Means with respect to each Participant, the delivery point for Water specified in Section 4.6.2.

DERP: Has the meaning given in Section 4.16.2(a).

Design Documents: Means all drawings (including plans, elevations, sections, details and diagrams), specifications, reports, calculations, records and submittals developed by the applicable designer as necessary for design of each Sites Owned Facility.

Downstream Facilities: Means the Sites-Owned Facilities or other facilities that are utilized by select Storage Partners listed in the Project Specific Information, as modified from time to time.

Downstream Facilities Capacity Interest: Means the undivided capacity right to convey Water in each of the Downstream Facilities granted by the Sites Authority and owned by the Storage Partners in accordance with Section 3.6 and the Partner Agreements, in the pro-rata share set out for each Storage Partner in the Project Specific Information, as modified from time to time and subject to the Sites Water Right, applicable law and governmental approvals**.**

DWR: Means the State of California Department of Water Resources.

Effective Date: Has the meaning given in Section 2.1.2 and specified in the Project Specific Information.

Exchange: Means a voluntary action by a Participant to exchange a specified quantity or quantities of Sites Water or Other Water with another person or entity to produce benefits as a result of the exchanged water. An exchange of Sites Water by the Sites Authority with DWR for the SWP water, as described in Section 8.4 of the Contract, shall have the meaning provided in the Sites-SWP Exchange Agreement. An exchange of Sites Water by the Sites Authority with Reclamation for the CVP water, as described in Section 8.4 of the Contract, shall have the meaning provided in a separate agreement(s) between the Sites Authority and Reclamation.

Final EIR: Has the meaning given in Recital D to this Contract.

Financing Agreements: Means any indenture, trust agreement, loan agreement, installment purchase agreement or other financing document entered into by the Sites Authority in connection with any Project Obligations.

Financing Obligations: Means the obligation of a Financing Participant to pay a percentage of the total Sites Financing Costs in accordance with Section 6.4. The amount of each Participant's Financing Obligations for any Sites Financing will be set out in separate line items in the Project Specific Information, which line items the Sites Authority may update from time to time as needed.

Financing Participant: Means, with respect and to the extent a Participant participates in a Sites Financing, all Participants other than Self-Funding Participants.

Financing Participation Percentage:

Means, with respect to each Sites Financing, the applicable percentage determined in accordance with the following formula:

FPP = [PFPC / TFPC]

Where:

FPP = Applicable Base Financing Participation Percentage or Downstream Financing Participation Percentage

TFPC = Total Fixed Project Costs to be funded with proceeds of a Sites Financing

PFPC = Participant's Fixed Project Costs to be funded with proceeds of a Sites Financing

The amount of each Financing Participant's Base Financing Participation Percentage and Downstream Financing Participation Percentage that is applicable to each Sites Financing will be determined by the Sites Authority Board at the time of such Sites Financing and shall be reflected in the Project Specific Information.

Fiscal Year: Means the period beginning on January 1 of each calendar year and ending on the last day of December of such calendar year, or any other accounting period hereafter selected and designated by the Sites Authority as the Fiscal Year of the Sites Authority.

Fixed O&M Costs: Means (1) all costs, calculated in accordance with Generally Accepted Accounting Principles, incurred by the Sites Authority (i) to administer, operate, maintain, power, repair, replace, and, to the extent that reserves are available, rehabilitate and improve, the Project, (ii) attributable to the conveyance and storage of water in the Sites Owned Facilities excluding pumping costs, carriage costs, and power interference costs; (iii) for the Sites Authority defense or other legal costs, including payment of claims, settlements or judgments (iv) to meet regulatory requirements associated with the Project; including administrative and legal costs of the Sites Authority, overhead, insurance, taxes (if any), fees of auditors, accountants, attorneys or engineers and insurance premiums, and including all other reasonable and necessary costs of the Sites Authority, or charges required to be paid by it to comply with the terms of the Financing Agreements or this Contract; (v) to replenish operating reserves of the Project; and (2) amounts required for compliance with Sections 3.2 and 3.5 of the Master Resolution or any similar provisions thereof; but excluding in all cases (A) depreciation, replacement and obsolescence charges or reserves for such costs, (B) amortization of intangibles or other bookkeeping entries of a similar nature, (C) costs of capital additions, replacements, betterments, extensions or improvements to the Project, which under Generally Accepted Accounting Principles are chargeable to a capital account or to a reserve for depreciation and (D) Sites Financing Costs, in each case incurred by the Sites Authority with respect to the Project. Fixed O&M Costs are incurred irrespective of the amount of Water diverted, stored or released to the Participants. Fixed O&M Costs include any and all costs and expense that are not Fixed Project Costs, Sites Financing Costs or Variable O&M Costs that may accrue to the Sites Authority after execution of this Contract. Participants shall be required to pay any Fixed O&M Costs not paid or not payable under the State and Federal Contracts and the Proposition 1 Water Storage Investment Program Funding Agreement.

Fixed Project Costs: Means (i) development, design, construction and capital costs of the Project, and (ii) individual repair, replacement, rehabilitation, improvement, or regulatory compliance activities incurred after Completion to the extent not covered by Fixed O&M Costs. Participants shall be required to pay any Fixed Project Costs not paid or not payable under the State and Federal Contracts and the Proposition 1 Water Storage Investment Program Funding Agreement.

Fixed Project Cost Funding Obligation: Means, with respect to each Participant, such Participant's obligation to fund Fixed Project Costs, calculated in accordance with Section 6.5.

Force Majeure: Means events beyond the reasonable control of a Party, including strikes, riots, wars, fire, earthquakes, drought, flood, pandemic, acts of God and/or unusual acts of nature, acts in compliance with any law, regulation or order (whether valid or invalid) by the United States of America or any state thereof or any other domestic or foreign governmental body or instrument thereof having jurisdiction in the matter, in each case which directly, materially and adversely affects a Party's ability to perform its obligations under this Contract.

Generally Accepted Accounting Principles: Means such accepted accounting practice as conforms at the time to generally accepted accounting principles to public agencies in the United States of America, consistently applied.

Good Industry Practice: Means the exercise of the degree of skill, diligence, prudence and foresight which would reasonably and ordinarily be expected from a skilled and experienced designer, engineer, constructor, supplier, manager, operator or maintenance provider, as applicable, operating in the United States under the same or similar circumstances and conditions, seeking in good faith to comply with its contractual obligations, this Contract and all Applicable Law and Governmental Approvals in conformance with applicable professional engineering principles, construction, operations and maintenance practices generally accepted as standards of the industry in the State. In the case of the Partner Facilities, Good Industry Practice shall be the standard of care required of a designer, engineer, constructor, supplier, manager, operator or maintenance provider under the Partner Agreements.

Governmental Approval: Means any permit, license, consent, concession, court order, grant, franchise, authorization, waiver, certification, exemption, filing, lease, registration or ruling, variance or other approval, guidance, protocol, mitigation agreement, settlement agreement, agreement or memorandum of agreement/understanding, and any revision, modification, amendment, supplement, renewal or extension of any of the foregoing, required by or with any Governmental Entity in order to perform the purposes of this Contract.

Governmental Entity: Means any federal, state, local or foreign government and any political subdivision or any governmental, quasi-governmental, judicial, public or statutory instrumentality, administrative agency, authority, body or entity other than the Sites Authority.

Inactive Storage Pool: An increment of total storage to be determined in the Operations Plan which is not available for immediate use by the Storage Partners.

Interim Agreements: Means previously executed agreements between the Participants and the Sites Authority under which Participants agreed to pay a pro-rata portion, based on participation percentages, for the operation, maintenance, legal, administrative, improvement, and other costs of developing the Project before execution of this Contract, as listed in the Project Specific Information.

JAMS: Means Judicial Arbitration and Mediation Service, Inc.

JPA Agreement: Means the Fifth Amended and Restated Joint Exercise of Powers Agreement, effective [___], 202[_], by and among the parties set forth on the execution page thereof, as amended and supplemented from time-to-time.

LAIF: Means the Local Agency Investment Fund of the State.

Lease Offer Notice: Has the meaning given in Section 8.1.1(e).

Lease Negotiated Terms: Has the meaning given in Section 8.1.1(a).

Lender: Means any lender, bondholder, noteholder, lessee or other holder of any Project Obligations as applicable, incurred in connection with a Sites Financing of the Project.

Master Resolution: Means the Sites Authority Resolution Providing for the Prioritization of Use for Project Revenues, approved and adopted by the Sites Authority, as supplemented and amended from time to time.

Monitoring and Measurement Plan: Means the Sites Reservoir Monitoring and Measurement Plan, initially dated ___, 2026, as such Sites Reservoir Monitoring and Measurement Plan may be modified and approved from time to time in accordance with the Sites Authority Policies and this Contract.

NEPA: Means the National Environmental Policy Act.

O&M Costs: Means Fixed O&M Costs and Variable O&M Costs, or either of them, as the context requires.

Other Water: Means water other than Sites Water that a Storage Partner may request the Sites Authority to store in and/or convey through Project Facilities consistent with Governmental Approvals and Applicable Law.

Participants: Means the entities listed in the Project Specific Information, including any successor or any assignee of such Participant permitted in accordance with Section 15.9. The California Department of Water Resources, as Acquirer or in its other roles described in Section 1.3 of the Contract, the California Department of Fish and Wildlife, and the U.S. Bureau of Reclamation are not Participants.

Parties: Means each of the Participants, the Sites Authority and the Acquirer that executed this Contract, or any of them, as the context requires.

Partner Agreements: Means any agreement entered into between the Sites Authority and another entity in accordance with which the Sites Authority has the right to divert, release and convey Water to or from the Project, as amended from time to time. The list of Partner Agreements as of the Effective Date is included in the Project Specific Information.

Partner Facilities: Means any facilities used by the Sites Authority to convey Water to, or from, the Sites Owned Facilities in accordance with the Partner Agreements, and as further described in Exhibit 1 to Appendix 2.

Project: Means the entire physical infrastructure and capital improvements to be designed, constructed, commissioned and completed or contracted for use by the Sites Authority, including the Sites Owned Facilities and the Partner Facilities, as reflected in the Project Specific Information, for the purpose of providing storage and conveyance of water for use by Storage Partners, and other benefits, in accordance with their Capacity Interest, as such project may be modified from time to time.

Project Assets: Means all of the tangible and intangible assets relating to the Project, including (i) the Sites Owned Facilities, (ii) all real property determined by the Sites Authority to be required for construction or operation of the Project, (iii) rights over the Project Facilities in the form of license, right-of-way or otherwise, (iv) tangible assets such as foundations, buildings, pavements, works, and equipment, (v) the Sites Water Right, and (vi) all Governmental Approvals. For the avoidance of doubt, the Base Facilities Capacity ~~Interest~~Interests, Downstream Facilities Capacity Interests and Partner Facilities are not Project Assets.

Project Costs: Means the sum of Fixed O&M Costs, Fixed Project Costs, Variable O&M Costs and Sites Financing Costs payable by the Participants under this Contract, or each of them, as the context requires.

Project Facilities: Means collectively the Sites Owned Facilities and the Partner Facilities, or any of them as the context requires.

Project Obligations: Means any bonds, notes, loans or other evidences of indebtedness issued or incurred by or on behalf of the Sites Authority with respect to the Project.

Project Specific Information: Means Appendix 2 to this Contract, as modified from time to time in accordance with this Contract.

Proposed Sites Financing Incurrence Date: Has the meaning given in Section 5.2.1.

Proposition 1 Water Storage Investment Program Funding Agreement: Means the agreement between the Sites Authority and the State through the California Water Commission anticipated to be titled Funding Agreement Between the State of California (California Water Commission) and the Sites Joint Powers Authority, documenting the maximum funding amount for the Project and anticipated to be dated after the date of this Contract.

Pro-rata Cost Share: Means the proportionate interest based on each Storage Partner's paid Fixed Project Costs prior to and after the Effective Date as calculated in accordance with the Sites Operations Plan.

Reclamation: Means the Bureau of Reclamation, an agency of the United States of America.

Reclamation Partnership Agreement: Means the agreement between the Sites Authority and Reclamation anticipated to be titled Reclamation Partnership Agreement setting out the rights and obligations associated with Reclamation's Capacity Interest and anticipated to be dated on or about the date of this Contract.

Release Request Form: Has the meaning given in Section 4.4.2.

Reservoir Management Board: Means the Reservoir Management Board of the Sites Authority, established by the JPA Agreement, as such Reservoir Management Board may be modified from time to time.

Revenue Fund: Means the fund by that name established by the Sites Authority in accordance with the Master Resolution.

Sacramento River Delivery Point: Has the meaning given in Section 4.6.32.

Sale Offer Notice: Has the meaning given in Section 8.2.1(e).

Sale Negotiated Terms: Has the meaning given in Section 8.2.1(a).

Secondary Delivery Point(s): Means a location designated by a Participant for delivery of Water as described in Section 4.6.

Self-Funding Election Date: Has the meaning given in Section 5.4.

Self-Funding Notice: Has the meaning given in Section 5.4.

Self-Funding Participant: Means a Participant that satisfies all or a portion of its obligation to pay Fixed Project Costs through Self-Funding Participant Cash Payments in accordance with Section 5.4. A Participant is a Self-Funding Participant to the extent that it satisfies its Fixed Project Cost Funding Obligation through Self-Funding Participant Cash Payments, and then only for the term of any payments of Fixed Project Costs using proceeds from Self-Funding Participant Cash Payments made by such Participant.

Self-Funding Participant Cash Payment: Has the meaning given in Section 5.5.2.

Sites Authority: Has the meaning given in Recital A of this Contract.

Sites Authority Bylaws: Means the Phase 3, 4, 5 Bylaws of the Sites Authority, adopted by the Sites Authority Board in connection with its adoption of the JPA Agreement, as amended or supplemented from time to time.

Sites Authority Policies: Means those policies and guidelines adopted by the Sites Authority and listed in the Project Specific Information, as such policies may be modified from time to time.

Sites Authority Records Management Policy: Means the Records Management Policy of the Sites Authority, initially dated [___], [_] as such policy may be modified from time to time.

Sites Financing: Means a financing by the Sites Authority of Fixed Project Costs through the incurrence of Project Obligations on behalf of the Financing Participants participating in the applicable financing.

Sites Financing Costs: Means any and all costs associated with a Sites Financing, including (i) the principal of and interest, including default interest incurred in connection with a Sites Financing, on all Project Obligations, (ii) fees payable to Lenders and others related to the issuance and administration of a Sites Financing, and (iii) reserves required in connection with the incurrence of Project Obligations, if any.

Sites Financing Incurrence Notice: Has the meaning given in Section 5.2.1.

Sites Operations Plan: Means the Sites Reservoir Operations Plan, initially dated ___, 2026, as such Sites Reservoir Operations Plan may be modified and approved from time to time in accordance with the Sites Authority Policies and this Contract. The initial form of the Sites Reservoir Operations Plan approved by the Sites Authority Board in accordance with the Sites Authority Bylaws is included as Appendix 8.

Sites Owned Facilities: Means the physical infrastructure and capital improvements for the Project owned by the Sites Authority, including dams, reservoir(s), pipelines, pump stations, and other facilities necessary or appropriate for providing water supply and storage including the facilities listed in the Project Specific Information, but excluding Partner Facilities and the real property required for the Project, and as further described in Exhibit 1 to Appendix 2.

Sites-SWP Exchange Agreement: Means the Agreement for Exchanges of Water Between the Sites Reservoir Project and the State Water Project, anticipated to be entered into by DWR and the Sites Authority around the same time as this Contract is executed.

Sites Water: Means water that is appropriated under the Sites Water Right.

Sites Water Right: Means the water right obtained and owned by the Sites Authority for the Project.

Sites Water Right Development Period: Means the time allowed by the California State Water Resources Control Board for Sites Authority to construct the Project and put Sites Water to beneficial use. The Sites Water Right identifies this time as XX years (or YY date), which could be extended upon approval by the California State Water Resources Control Board in the future.

State: Means the State of California.

State and Federal Contracts: Means the Public Benefit Agreements and the Reclamation Partnership Agreement, or each of them as the context requires.

State and Federal Operations Agreement: Means the [Sites/DWR/Reclamation Coordinated Operations Agreement], dated ___, [2027], as such State and Federal Operations Agreement may be modified from time to time.

State Water Project or SWP: Means a portion of the State Water Resources Development System as defined in Section 12931 of the California Water Code.

State Water Project Facilities: Means those facilities included in the State Water Project pursuant to the California Water Resources Development Bond Act (California Water Code Section 12930 *et seq*.).

Storage Allocation: Means the maximum actual capacity allocated to a Storage Partner for storing Water in the Project Facilities, measured and determined from time to time in accordance with the Sites Operations Plan.

Storage Opportunity Request Form: Has the meaning given in Section 4.4.2.

Storage Partners: The governmental agencies, water organizations, and others who have funded and received a Storage Allocation in Sites Reservoir and the resulting water supply or water supply related benefits from the Project. Storage Partners include Participants, CDFW, and Reclamation.

Stored Water: Means the amount of Water that a Storage Partner has stored in the Project Facilities at any given time, as measured from time to time by the Sites Authority in accordance with the Sites Operations Plan.

SWP Participants: Means those Participants listed in the Project Specific Information which have signed Appendix 9 and elected to have the Acquirer acquire certain capacity rights in the Sites Reservoir Project, including the associated Sites Water, pursuant to such Participants' State Water Project Water Supply Contracts with DWR, as may be amended.

Total Participant Obligation: Means, with respect to a Participant, the sum of (i) such Participant's cash deposit, and (ii) the amount of the Participant Fixed Project Costs to be financed from the proceeds of a proposed Sites Financing, if any, as set forth in such Participant's Notice of Self-Funding Election.

Variable O&M Costs: Means the operation, maintenance, power (including pumping), carriage costs, power interference costs, replacement and other costs, including O&M Costs and costs and expenses, including funding of reserves in accordance with the Sites Authority Policies, to the Sites Authority under this Contract and wheeling costs on a per Acre-foot basis to account for the use of Partner Facilities, and incurred by the Sites Authority in connection with the Project in an amount which is dependent upon and varies with the amount of Sites Water diverted, stored or released from the Project Facilities to the Participants. Participants shall be required to pay any Variable O&M Costs not paid or not payable under the State and Federal Contracts and the Proposition 1 Water Storage Investment Program Funding Agreement.

Water: Means Sites Water or Other Water conveyed through, or stored by, Storage Partners in Project Facilities.

Wind-Up Resolution: Has the meaning given in Section 11.1.1.

Winding-Up Agent: Has the meaning given in Section 11.1.1.

APPENDIX 2

PROJECT SPECIFIC INFORMATION

	Sites Owned Facilities	Federal Facilities	Partner Facilities
Base Facilities	▪ Sites Reservoir ▪ Sites Dam ▪ Golden Gate Dam ▪ Sites saddle dams/dikes ▪ Terminal Regulating Reservoir ▪ Terminal Regulating Reservoir Pumping Generating Plant ▪ Funks Pumping Generating Plant ▪ Power transmission lines ▪ Electrical substations ▪ Sites Lodoga Bridge ▪ Other support facilities • Pipelines (Terminal Regulating Reservoir, Funks) • Maxwell Intertie Pipeline • Inlet/outlet tower • Transition manifold • Maintenance and storage building • Administration and operations building • Recreation areas including day use boat ramp	▪ Portion of Tehama-Colusa Canal from Red Bluff Diversion to Funks Reservoir ▪ Portion of Tehama-Colusa Canal from Funks Reservoir to the terminus of the Tehama-Colusa Canal ▪ Funks Reservoir ▪ Red Bluff Pumping Plant	▪ Portion of Glenn Colusa Irrigation District Main Canal from the Hamilton City Pump Station to the Terminal Regulating Reservoir ▪ Hamilton City Pumping Plant
Downstream Facilities	▪ Dunnigan Pipeline and associated facilities	▪ Portion of Tehama-Colusa Canal from Funks Reservoir to the Dunnigan Pipeline	▪ Wallace Weir ▪ Knights Landing Outfall Gates ▪ Knights Landing Ridge Cut ▪ Colusa Basin Drain south of Balsdon Weir
Partner Agreements	▪ Facility Use Agreement between the Sites Authority and Tehama-Colusa Canal Authority, dated [_]. ▪ Facility Use Agreement between the Sites Authority and Glenn-Colusa Irrigation		

	Sites Owned Facilities	Federal Facilities	Partner Facilities
	District, dated [_]. ▪ Exchange Agreement between the Sites Authority and DWR, dated [_]. ▪ Conveyance Agreement between Sites Authority and DWR, dated [ ]. ▪ Refuge Water Donation Agreement between Reclamation and Sites Authority, dated [ ]. ▪ Wheeling agreements between Sites Authority, Richvale Irrigation District, and Western Canal Water District dated (20XX) and dated (20XX) respectively. ▪ Wheeling agreement with Glenn-Colusa Irrigation District dated (20XX). ▪ Excess Capacity Contract between the Sites Authority and Reclamation, dated [_].**[Note: All dates to be updated once complete]**		

Effective Date Section 2.1.2	[_] **[Note: To be inserted as of the signature and delivery date of the last executing and delivering Participant under Section 2.1.1]**			
Interim Agreements	▪ Phase 1 Project Agreement dated November 21, 2016 ▪ 2019 Reservoir Project Agreement dated April 1, 2019 ▪ First Amendment to 2019 Reservoir Project Agreement dated January 1, 2020 ▪ Second Amendment to 2019 Reservoir Project Agreement dated July 1, 2020 ▪ Third Amendment to 2019 Reservoir Project Agreement dated January 1, 2022			
Sites Authority Policies Appendix 1	▪ Accounting Policy, dated January 16, 2026 ▪ Accounts Payable Approval Policy, dated January 16, 2026 ▪ Asset Management Policy, dated July 19, 2024 ▪ Budget Policy, dated January 16, 2026 ▪ Construction Workforce Policy, dated June 24, 2026 ▪ Debt Management Policy, dated November 21, 2022 ▪ Funding Policy, dated August 3, 2020 ▪ Investment Policy, dated May 19, 2023 ▪ Procurement and Contract Policy, dated November 15, 2024 ▪ Real Property and Land Management Policy, dated January 16, 2026 ▪ Records Management Policy, dated January 17, 2025 ▪ Reserve Policy, dated January 16, 2026 ▪ Local CEQA Guidelines, dated February 16, 2024			
Non-Participant Parties and Address for Notices Section 15.3	**Party**	**Notice Details**		
	Sites Authority	[INSERT NOTICE DETAILS]		
	DWR / Acquirer	[INSERT NOTICE DETAILS]		
Participants, Address for Notices and	**Participant**	**Notice Details**	**Delivery Point**	**Payment Election**

Delivery Point Section 15.3	Antelope Valley-East Kern WA	[INSERT NOTICE DETAILS]	[TO BE INSERTED]	[Appendix 9]
	City of American Canyon	[INSERT NOTICE DETAILS]	[TO BE INSERTED]	[Rates and Charges]
	Coachella Valley WD	[INSERT NOTICE DETAILS]	[TO BE INSERTED]	[Appendix 9]
	Colusa County	[INSERT NOTICE DETAILS]	[TO BE INSERTED]	[Land Based Charges]
	Colusa County WD	[INSERT NOTICE DETAILS]	[TO BE INSERTED]	[Land Based Charges]
	Cortina WD	[INSERT NOTICE DETAILS]	[TO BE INSERTED]	[Land Based Charges]
	Davis WD	[INSERT NOTICE DETAILS]	[TO BE INSERTED]	[Land Based Charges]
	Desert WA	[INSERT NOTICE DETAILS]	[TO BE INSERTED]	[Appendix 9]
	Dunnigan WD	[INSERT NOTICE DETAILS]	[TO BE INSERTED]	[Land Based Charges]
	Glenn-Colusa ID	[INSERT NOTICE DETAILS]	[TO BE INSERTED]	[Rates and Charges]
	Irvine Ranch WD	[INSERT NOTICE DETAILS]	[TO BE INSERTED]	[Rates and Charges]
	LaGrande WD	[INSERT NOTICE DETAILS]	[TO BE INSERTED]	[Land Based Charges]
	Metropolitan Water District of	[INSERT NOTICE DETAILS]	[TO BE INSER	[Rates and Charges]

	SC		TED]	
	Reclamation District 108	[INSERT NOTICE DETAILS]	[TO BE INSER TED]	[Land Based Charges]
	Rosedale-Rio Bravo WD	[INSERT NOTICE DETAILS]	[TO BE INSER TED]	[Rates and Charges]
	San Bernardino Valley Municipal WD	[INSERT NOTICE DETAILS]	[TO BE INSER TED]	[Appendix 9]
	San Gorgonio Pass WA	[INSERT NOTICE DETAILS]	[TO BE INSER TED]	[Appendix 9]
	Santa Clara Valley WD	[INSERT NOTICE DETAILS]	[TO BE INSER TED]	[Rates and Charges]
	Santa Clarita Valley WA	[INSERT NOTICE DETAILS]	[TO BE INSER TED]	[Appendix 9]
	Westside WD	[INSERT NOTICE DETAILS]	[TO BE INSER TED]	[Land Based Charges]
	Wheeler Ridge – Maricopa WSD	[INSERT NOTICE DETAILS]	[TO BE INSER TED]	[Payment Source Set Forth in Appendix 7C-2]
	Zone 7 WA	[INSERT NOTICE DETAILS]	[TO BE INSER TED]	[Rates and Charges]
SWP Participants Appendix 9	Antelope Valley-East Kern WAC Coachella Valley WD Desert WA San Bernardino Valley Municipal WD San Gorgonio Pass WA Santa Clarita Valley Water Agency			
Zone 3 Participants –	Colusa County Water District Cortina Water District, Davis Water District Dunnigan Water District			

	LaGrande Water District Westside Water District (It is anticipated that these agencies will in whole or in part designate their allocated capacity interests to Zone 3 and Zone 3 will in turn contract with and allocate to landowners within Zone 3 such benefits and obligations associated with Zone 3's Sites capacity interest.)		
Sites Authority Payment Information	[_] **[Note: To be inserted]**		
Participant Capacity Interest Appendix 1 **[Note: Percentages to be completed based on the final financial model and commitments by Participants]**	**Participant**	**Base Facilities Capacity Interest**	**Downstream Facilities Capacity Interest**
	City of American Canyon	[INSERT %]	[INSERT %]
	Colusa County	[INSERT %]	[INSERT %]
	Colusa County WD	[INSERT %]	[INSERT %]
	Cortina WD	[INSERT %]	[INSERT %]
	Davis WD	[INSERT %]	[INSERT %]
	Dunnigan WD	[INSERT %]	[INSERT %]
	Glenn-Colusa ID	[INSERT %]	[INSERT %]
	Irvine Ranch WD	[INSERT %]	[INSERT %]
	LaGrande WD	[INSERT %]	[INSERT %]
	Metropolitan Water District of SC	[INSERT %]	[INSERT %]
	Reclamation District 108	[INSERT %]	[INSERT %]
	Rosedale-Rio Bravo WD	[INSERT %]	[INSERT %]
	Santa Clara Valley WD	[INSERT %]	[INSERT %]
	Westside WD	[INSERT %]	[INSERT %]
	Wheeler Ridge –	[INSERT %]	[INSERT %]

	Maricopa WSD		
	Zone 7 WA	[INSERT %]	[INSERT %]
Acquirer's Capacity Interest **Appendix 9**	SWP Participants	[INSERT %]	[INSERT %]
Total		[INSERT %]	[INSERT %]
State and Federal Capacity Interests Appendix 1	**Party**	**Base Facilities Capacity Interest**	**Downstream Facilities Capacity Interest**
	State (CDFW)	[INSERT %]	[INSERT %]
	Reclamation	[INSERT %]	[INSERT %]
Total	Total	[INSERT %]	[INSERT %]
Total with Participant Capacity Interest and State and Federal Capacity Interest		100.00%	100.00%
SWP Participants' Shares of the Acquirer's Capacity Interest	**SWP Participant**	**Base Facilities Capacity Interest**	**Downstream Facilities Capacity Interest**
	Antelope Valley-East Kern WA	[INSERT %]	[INSERT %]
	Coachella Valley WD	[INSERT %]	[INSERT %]
	Desert WA	[INSERT %]	[INSERT %]
	San Bernardino Valley Municipal WD	[INSERT %]	[INSERT %]
	San Gorgonio Pass WA	[INSERT %]	[INSERT %]
	Santa Clarita Valley WA	[INSERT %]	[INSERT %]
Total		[INSERT %]	[INSERT %]
Financing Participation Percentage	**Participant**	**Base Facilities Financing Participation**	**Downstream Facilities Financing Participation**

Appendix 1

[Note: Financing Participation Percentage to be completed with each Sites Financing.]

	Percentage	**Percentage**
[INSERT PARTICIPANT]	[INSERT %]	[INSERT %]
[INSERT PARTICIPANT]	[INSERT %]	[INSERT %]
[INSERT PARTICIPANT]	[INSERT %]	[INSERT %]
[INSERT PARTICIPANT]	[INSERT %]	[INSERT %]
[INSERT PARTICIPANT]	[INSERT %]	[INSERT %]
[INSERT PARTICIPANT]	[INSERT %]	[INSERT %]
[INSERT PARTICIPANT]	[INSERT %]	[INSERT %]

EXHIBIT 1 TO APPENDIX 2

PROJECT FACILITIES MAP

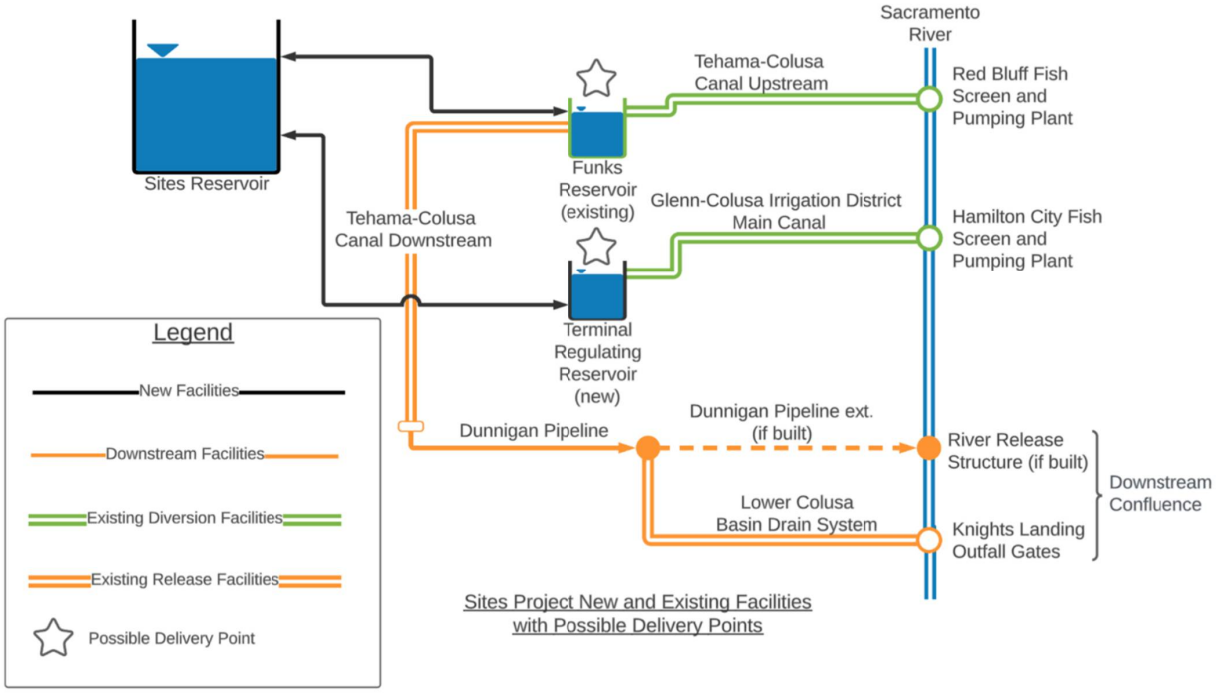

APPENDIX 3

FORM OF SELF-FUNDING NOTICE FOR INITIAL $500,000,000 OF FIXED PROJECT COSTS

[Note: Form of notice to be modified for future self funding elections to remove references to initial $500,000,000 of Fixed Project Costs]

SITES PROJECT AUTHORITY

NOTICE OF SELF-FUNDING ELECTION

_____, 20__

As it relates to the first $500,000,000 of total Participant Fixed Project Costs only, _____ (the "**Participant**") is hereby providing the Sites Project Authority (the "Sites Authority"), notice in accordance with Section 5.4 of that certain Benefits & Obligations Contract (the "**Contract**"), dated ____, 20__, by and among the Sites Authority and the participants listed therein, including the Participant, of the Participant's intention to self-fund [all of such Participant Fixed Project Costs] / [a portion~~]~~ of the obligated portion of ~~the~~such Fixed Project Costs of the Sites Project identified in the Notice of Proposed Sites Financing by the Sites Project Authority, dated ___, [20__] (the "**Incurrence Notice**"), delivered by the Sites Authority to the Participant (the "**Participant Fixed Project Costs**"). Unless the context otherwise requires, all capitalized terms acronyms, abbreviations and terms used in this Appendix have the meanings given in the Contract.

Set forth below is (i) the amount of the cash deposit that the Participant will deposit with the Sites Authority to self-fund Participant Fixed Project Costs for the first $500,000,000 of Total Participant Fixed Project Costs and (ii) the amount of the Participant Fixed Project Costs to be financed from the proceeds of the proposed Sites Financing the first $500,000,000 of total Participant Fixed Project Costs, if any.

A. Participant cash deposit: $_____

B. Participant Fixed Project Costs to be financed from the proposed Sites Financing: $_____

C. Total Participant Obligation: $_____ [sum of A and B]

The Participant acknowledges that the amount specified in clause A above will need to be deposited with the Sites Authority in accordance with a mutually acceptable schedule or by no later than ____ (being the 60th day prior to the [Project Obligation Incurrence Date] [the Business Day prior to the scheduled date on which the offering document relating to the Sites Financing is to be made available to potential investors] set forth in the Incurrence Notice), as required by Section 5.5.2 of the Contract; subject to a grace period of 30 days following such date. If the Participant does not deposit the

amount specified in clause A above with the Sites Authority by the expiration of such grace period, the Participant acknowledges that the Participant will then be considered a Financing Participant with respect to the entire portion of the proposed Sites Financing allocable to the Participant and will be obligated to pay the related Sites Financing Costs.

Dated: _____, 20__ [Participant Name]

By: _____
[Title of Officer]

APPENDIX 4

FORM OF SITES FINANCING INCURRENCE NOTICE

SITES PROJECT AUTHORITY

NOTICE OF PROPOSED SITES FINANCING
BY THE SITES PROJECT AUTHORITY

_____, 20__

The Sites Project Authority (the "Sites Authority") is hereby providing the parties to the Benefits & Obligations Contract, dated ____, 20__, with the Sites Authority (the "Contract"), with notice of a proposed Sites Financing by the Sites Authority, as provided for in Section 5.2.1 of the Contract. Unless the context otherwise requires, all acronyms, abbreviations and terms used in this Appendix have the meanings given in the Contract.

A. Type of Project Obligations: _____

B. Aggregate principal amount of Project Obligations: $_____

C. Project components to be financed and/or refinanced: [list components]

D. Proposed Sites Financing Incurrence Date: _____

E. A description of the proposed financing structure, expected method of sale, expected term, pro-forma cash flows and each Participant's estimated share of Fixed Project Costs to be financed or refinanced from the proposed Sites Financing is set forth in Schedule A hereto.

F. Each Participant's estimated annual Sites Financing Costs related to the proposed Sites Financing is set forth in Schedule B hereto.

G. The amount of the cash deposit required to be made by each Participant if the Participant elects to self-fund such Project Costs in accordance with Sections 5.4 and 5.5 of the Contract is set forth in Schedule C hereto.

If a Participant intends for the Sites Authority to finance/refinance the Project components listed in clause C above, the Participant does not need to take any further action.

If a Participant intends to self-fund all or a portion of the applicable Project Costs described in clause E above such Participant must provide the Sites Authority with a Self-Funding Notice on or prior to _____, 20__ (on or before the 90th day prior to the anticipated [Sites Financing Incurrence Date] [the Business Day prior to the scheduled date on which the offering document relating to the Sites Financing is to be made available to potential investors]) all as provided in Section 5.4.2 of the Contract. A form

of the Self-Funding Notice is attached to the Contract as Appendix 3. In addition, such Participant must deposit the amount of such self-funding with the Sites Authority by no later than _____, 20__, in accordance with Section 5.5.2 of the Contract; subject to a grace period of 30 days following such date.

[ADDITIONAL TEXT MAY BE ADDED AS NEEDED]

SITES PROJECT AUTHORITY

By: _____

[Title of Officer]

APPENDIX 5

FORM OF PARTICIPANT OPINION LETTER

[This opinion shall be delivered upon execution of the Sites Reservoir Benefits & Obligations Contract]

[_], 202[_]
Sites Authority
[ADDRESS]

[United States Environmental Protection Agency
1200 Pennsylvania Avenue, NW
Washington, DC 20460]

Ladies and Gentlemen:

We are acting as [general/special] counsel to ***[PARTICIPANT]*** (the "Participant") in connection with the Sites Reservoir Benefits & Obligations Contract (the "Contract"), between the Sites Authority and Participant, and have acted as general counsel to the Participant in connection with the matters referred to in this opinion letter (this "Opinion"). As such counsel, we have examined and are familiar with (i) documents relating to the existence, organization and operation of the Participant provided to us by the Participant, (ii) certifications by officers of the Participant, (iii) all necessary documentation of the Participant relating to the authorization, execution and delivery of the Contract, and (iv) an executed counterpart of the Contract. Terms used herein and not otherwise defined have the respective meanings set forth in the Contract.

Based upon the foregoing and such examination of law and such other information, papers and documents as we deem necessary or advisable to enable us to render this opinion, including the Constitution and laws of the State of California, together with the resolutions, ordinances and public proceedings of the Participant, we are of the opinion that:

1. The Participant is a _____, duly created, organized and existing under the laws of the State of California and duly qualified to [furnish water service within its boundaries].

2. The Participant has legal right, power and authority to enter into the Contract and to carry out and consummate all transactions reasonably contemplated in or by the Contract, and the Participant has complied with the provisions of Applicable Law and Governmental Approvals relating to such transactions.

3. The Contract has been duly authorized, executed and delivered by the Participant, is in full force and effect as to the Participant in accordance with its terms and, subject to the qualifications set forth in the second to the last paragraph of this Opinion, and assuming that the Sites Authority has all requisite power and authority, and has taken all necessary action, to authorize, execute and deliver such Contract, the Contract constitutes the valid and binding obligation of the Participant.

4. The obligations of the Participant to make payments under the Contract from the source of payment identified in Appendix 7[A][B][C-1][C-2] of the Contract, dated [__], 2026, executed by the Participant, or other lawfully available funds as provided in the Contract is a valid, legal and binding obligation of the Participant enforceable in accordance with its terms.

5. No approval, consent or authorization of any governmental or public agency, authority or person is required for the execution and delivery by the Participant of the Contract.

6. The authorization, execution and delivery of the Contract and compliance with the provisions thereof will not conflict with or constitute a breach of, or default under, any instrument relating to the organization, existence or operation of the Participant, any commitment, agreement or other instrument to which the Participant is a party or by which it or its property is bound or affected, or any ruling, regulation, ordinance, judgment, order or decree to which the Participant (or any of its officers in their respective capacities as such) is subject or any provision of the laws of the State of California relating to the Participant and its affairs.

7. There is no action, suit, proceeding, inquiry or investigation at law or in equity, or before any court, public board or body, pending or, to our knowledge, threatened against or affecting the Participant or any entity affiliated with the Participant or any of its officers in their respective capacities as such, which questions the powers of the Participant referred to in paragraph 2 above or the validity of the proceedings taken by the Participant in connection with the authorization, execution or delivery of the Contract, or wherein any unfavorable decision, ruling or finding would materially adversely affect the transactions contemplated by the Contract, or which would adversely affect the validity or enforceability of the Contract.

[8. The Participant is not entitled to claim governmental immunity under the California Government Claims Act, or under any ordinance, regulation or other legislative action of the Participant in any breach of contract action under the Contract.]

The opinion expressed in paragraph 3 above is qualified to the extent that the enforceability of the Contract may be limited by any applicable bankruptcy, insolvency, reorganization, arrangement, moratorium, or other laws affecting creditors' rights, to the application of equitable principles and to the exercise of judicial discretion in appropriate cases and to the limitations on legal remedies against public agencies in the State of California and provided that no opinion is expressed with respect to any indemnification or contribution provisions contained therein.

Very truly yours,

APPENDIX 6

FORM OF SITES AUTHORITY OPINION LETTER

[This opinion shall be delivered to the Sites Authority upon execution of the Sites Reservoir Benefits & Obligations Contract]

[_], 202[_]

Sites Authority
[ADDRESS]

[United States Environmental Protection Agency
1200 Pennsylvania Avenue, NW
Washington, DC 20460]

Ladies and Gentlemen:

We are acting as [special/general] counsel to the Sites Authority (the "Sites Authority") in connection with that certain Sites Reservoir Benefits & Obligations Contract, dated as of [_], 202[_] (the "Contract"), between the Sites Authority and each of the Participants identified on Exhibit 1 attached hereto (each a "Participant") in connection with the matters referred to in this opinion letter (this "Opinion"). As such counsel, we have examined and are familiar with (i) documents relating to the existence, organization and operation of the Sites Authority provided to us by the Sites Authority, (ii) certifications by officers of the Sites Authority, (iii) all necessary documentation of the Sites Authority relating to the authorization, execution and delivery of the Contract, and (iv) an executed counterpart of the Contract. Terms used in this Opinion and not otherwise defined have the respective meanings set forth in the Contract.

Based upon the foregoing and such examination of law and such other information, papers and documents as we deem necessary or advisable to enable us to render this Opinion, including the Constitution and laws of the State of California, together with the resolutions, ordinances and public proceedings of the Sites Authority, we are of the opinion that:

1. The Sites Authority is a joint exercise of powers agency, duly created, organized and existing under the laws of the State of California.

2. The Sites Authority has legal right, power and authority to enter into the Contract and to carry out and consummate all transactions contemplated in the Contract, and the Sites Authority has complied with the provisions of Applicable Law and Governmental Approvals relating to such transactions.

3. The Contract has been duly authorized, executed and delivered by the Sites Authority, is in full force and effect as to the Sites Authority in accordance with its terms and subject to the qualifications set forth in the second to the last paragraph of this Opinion, and assuming that each Participant has all requisite power and authority, and has taken all necessary action, to authorize, execute and deliver such Contract, the Contract constitutes the valid and binding obligation of the Sites Authority.

4. No approval, consent or authorization of any governmental or public agency, authority or person is required for the execution and delivery by the Sites Authority of the Contract.

5. The authorization, execution and delivery of the Contract and compliance with the provisions thereof will not conflict with or constitute a breach of, or default under, any instrument relating to the organization, existence or operation of the Sites Authority, any commitment, agreement or other instrument to which the Sites Authority is a party or by which it or its property is bound or affected, or, to the best of our knowledge, any ruling, regulation, ordinance, judgment, order or decree to which the Sites Authority (or any of its officers in their respective capacities as such) is subject or any provision of the laws of the State of California relating to the Sites Authority and its affairs.

6. There is no action, suit, proceeding, inquiry or investigation at law or in equity, or before any court, public board or body, pending or, to our knowledge, threatened against or affecting the Sites Authority or any of its officers in their respective capacities as such, which questions the powers of the Sites Authority referred to in paragraph 2 above or the validity of the proceedings taken by the Sites Authority in connection with the authorization, execution or delivery of the Contract, or wherein any unfavorable decision, ruling or finding would materially adversely affect the transactions contemplated by the Contract or which, in any way, would adversely affect the validity or enforceability of the Contract.

[7. The Sites Authority is not entitled to claim governmental immunity under the California Government Claims Act, or under any regulation or other legislative action of the Sites Authority in any breach of contract action under the Contract.]

The opinion expressed in paragraph 3 above is qualified to the extent that the enforceability of the Contract may be limited by any applicable bankruptcy, insolvency, reorganization, arrangement, moratorium, or other laws affecting creditors' rights, to the application of equitable principles and to the exercise of judicial discretion in appropriate cases and to the limitations on legal remedies against public agencies in the State of California and provided that no opinion is expressed with respect to any indemnification or contribution provisions contained therein.

Very truly yours,

EXHIBIT 1 TO APPENDIX 6

Participants

[INSERT PARTICIPANT]

[INSERT PARTICIPANT]

[INSERT PARTICIPANT]

[INSERT PARTICIPANT]

APPENDIX 7
PAYMENT APPENDIX

Appendix 7A Rates and Charges

Appendix 7B Statement of Charges

Appendix 7C Land Based Charges

APPENDIX 7A
RATES AND CHARGES

This Appendix 7A (this "Appendix") to the Benefits and Obligations Contract (the "Contract"), dated as of ___, 2026, by and between the entities listed in Appendix 2 to the Contract and the Sites Project Authority (the "Sites Authority") sets forth the source of payment of the Participant executing this Appendix for amounts due to the Sites Authority in accordance with the Contract and certain other terms supplementary to the Contract.

Unless the context otherwise requires, all acronyms, abbreviations and terms used in this Appendix have the meanings given in the Contract.

A. **Source of Payment**. The Participant shall make payments under the Contract from revenues of the Participant's water system and may treat such payments as an operation and maintenance expense of the Participant or as an operation and maintenance expense and capital contribution, as determined in accordance with Generally Accepted Accounting Principles~~, solely from, and prior to other~~. Any payments ~~other than operation~~made under this contract to Sites Authority that are not treated as operating and maintenance expenses~~, from the revenues of the Participant's water system~~ shall be paid in priority after all operating and maintenance expenses.. Nothing in the Contract shall be construed as prohibiting the Participant from using any other funds for purposes of satisfying any provisions of this Contract.

B. **Participant Rates and Charges**. To the fullest extent permitted by law, the Participant will fix and prescribe, at the commencement of the fiscal year of the Participant ("**Participant Fiscal Year**"), rates and charges for the Participant's water system which, together with any other lawfully available revenues of the Participant, and, if applicable, taking into account amounts transferred from a rate stabilization fund or other similar fund of the Participant, are reasonably expected to be sufficient to pay the Participant's operation and maintenance expenses for such Participant Fiscal Year, including but not limited to amounts due to the Sites Authority under the Contract.

This Appendix is supplemental to the terms of the Contract, and, in the event of a conflict between the provisions of this Appendix and the provisions of the Contract, the terms of this Appendix shall govern.

Dated: _____, 202_ [PARTICIPANT]

By: _____

APPENDIX 7B
[RESERVED]

APPENDIX 7C
LAND BASED CHARGES

(See attached)

[LAND BASED CHARGES – DISTRICT APPENDIX]

APPENDIX 7C-1

LAND BASED CHARGES (DISTRICT IMPOSED)

This Appendix 7C-1 (this "Appendix") to the Benefits and Obligations Contract (the "Contract"), dated as of ___, 2026, by and between the entities listed therein and the Sites Project Authority (the "Sites Authority") sets forth the source of payment of the Participant executing this Appendix for amounts due to the Sites Authority pursuant to the Contract and certain other terms supplementary to the Contract.

Unless the context otherwise requires, all acronyms, abbreviations and terms used in this Appendix have the meanings given in the Contract.

A. Source of Payment. The Participant shall make payments under the Contract as an operation and maintenance expense of the Participant or as an operation and maintenance expense and capital contribution, as determined in accordance with Generally Accepted Accounting Principles. Any payments made under this contract to Sites Authority that are not treated as operating and maintenance expenses shall be paid in priority after all operating and maintenance expenses. Such payments shall be paid from the revenues of the Participant's water system, including any land based charges. Nothing in the Contract shall be construed as prohibiting the Participant from using any other funds for purposes of satisfying any provisions of this Contract.

B. Participant Revenues. To the fullest extent permitted by law, the Participant shall fix, prescribe and collect, at the commencement of the fiscal year of the Participant (the "Participant Fiscal Year"), rates and charges for the Participant's water system which, together with any other lawfully available revenues of the Participant, and, if applicable, taking into account amounts transferred from a rate stabilization fund or other similar fund of the Participant, are reasonably expected to be sufficient to pay all amounts owed to the Sites Authority after the application of land based charges described in C below reasonably expected to be collected and applied as described in C below .

C. Participant Land Based Charges. During each Participant Fiscal Year, to the fullest extent permitted by law, the Participant shall levy and collect land based charges in an amount equal to 110% of the amount of the Participant's Financing Obligations payable during such Participant Fiscal Year and shall apply such land based charges to the payment of the Participant's Financing Obligations.

This Appendix is supplemental to the terms of the Contract, and, in the event of a conflict between the provisions of this Appendix and the provisions of the Contract, the terms of this Appendix shall govern.

Dated: _____, 2026

[PARTICIPANT]

By: _____

[LAND BASED CHARGES WRMWD APPENDIX]

APPENDIX 7C-2

LAND BASED CHARGES
(WHEELER RIDGE-MARICOPA WATER
STORAGE DISTRICT IMPOSED)

This Appendix 7C-2 (this "Appendix") to the Benefits and Obligations Contract (the "Contract"), dated as of ___, 2026, by and between the entities listed therein and the Sites Project Authority (the "Sites Authority") sets forth the exclusive source of payment of the Wheeler Ridge-Maricopa Water Storage District ("WRMWSD") and exclusive recourse for amounts due to the Sites Authority pursuant to the Contract and certain other terms supplementary to the Contract.

Unless the context otherwise requires, all acronyms, abbreviations and terms used in this Appendix have the meanings given in the Contract.

A. **Source of Payment**. WRMWSD shall make payments due under the Contract solely (i) from special benefit assessments or charges in lieu of assessments (the "Assessments") levied by WRMWSD on certain parcels of land within WRMWSD (the "Participating Properties"), the owners of which (the "Participating Landowners") have executed agreements with WRMWSD to participate in the Project (the "Wheeler-Ridge Participating Landowner Benefits and Obligations Contracts"), pursuant to and as authorized by such Wheeler-Ridge Participating Landowner Benefits and Obligations Contracts and applicable law, and (ii) from amounts received by WRMWSD from the Participating Landowners for the provision of water service, water storage and other services with respect to the Project collected under the Wheeler-Ridge Participating Landowner Benefits and Obligations Contracts (collectively, the "Pledged Landowner Revenues"). The Sites Authority shall not have the right of any recourse against the revenues, reserves or other assets of WRMWSD or the Wheeler Ridge-Maricopa Groundwater Sustainability Agency (the "GSA") or any revenues generated by WRMWSD or the GSA from non-Sites related water service or groundwater management activities provided by WRMWSD or the GSA, other than the Pledged Landowner Revenues. The Sites Authority's recourse for the failure of WRMWSD to pay WRMWSD's obligations under the Contract or to comply with the terms of the Contract will only be against the Pledged Landowner Revenues, including amounts received by WRMWSD from WRMWSD's enforcement of the Assessments and the respective Wheeler-Ridge Participating Landowner Benefits and Obligations Contracts.

B. **Assessments**. During each fiscal year of WRMWSD (the "WRMWSD Fiscal Year"), to the fullest extent permitted by law, WRMWSD shall levy and collect Assessments in an amount equal to 110% of the amount of WRMWSD's Financing Obligations payable during such WRMWSD Fiscal Year and shall apply such Assessments to the payment of WRMWSD's Financing Obligations.

C. **Service Revenues**. To the fullest extent permitted by law, WRMWSD shall fix, prescribe and collect, during the WRMWSD Fiscal Year, amounts under the

Wheeler-Ridge Participating Landowner Benefits and Obligations Contracts, which are reasonably expected to be sufficient to pay amounts coming due under the Contract (net of WRMWSD Financing Obligations that are reasonably expected to be paid with the proceeds of the Assessments) for such WRMWSD Fiscal Year.

D. Enforcement of Wheeler-Ridge Participating Landowner Benefits and Obligations Contracts. WRMWSD shall at all times have Wheeler-Ridge Participating Benefits and Obligations Contracts in place with each of the Participating Landowners. To the fullest extent permitted by law, WRMWSD covenants and agrees that WRMWSD shall enforce the WRMWSD's rights under each Wheeler-Ridge Participating Landowner Benefits and Obligations Contract against the respective Participating Landowners, collect amounts due in a timely manner and shall take all necessary actions permitted by the respective Wheeler-Ridge Participating Landowner Benefits and Obligations Contracts, including the discontinuance of all Sites water to parcels of land owned by those specific Participating Landowners in default under the respective Wheeler-Ridge Participating Landowner Benefits and Obligations Contracts, and by law to collect in such time and amounts Assessments and amounts payable pursuant to the Wheeler-Ridge Participating Landowner Benefits and Obligations Contracts as shall permit WRMWSD to pay its obligations under the Contract in accordance with the terms of the Contract.

This Appendix is supplemental to the terms of the Contract, and, in the event of a conflict between the provisions of this Appendix and the provisions of the Contract, the terms of this Appendix shall govern.

Dated: _____, 2026

WHEELER RIDGE-MARICOPA WATER STORAGE DISTRICT

By: _____

[LAND BASED CHARGES – CCFCWCD APPENDIX]

APPENDIX 7C-3

LAND BASED CHARGES
(COLUSA COUNTY FLOOD CONTROL AND
WATER CONSERVATION DISTRICT IMPOSED)

This Appendix 7C-3 (this "Appendix") to the Benefits and Obligations Contract (the "Contract"), dated as of ___, 202_, by and between the entities listed therein and the Sites Project Authority (the "Sites Authority") sets forth the source of payment of the Participant executing this Appendix for amounts due to the Sites Authority pursuant to the Contract and certain other terms supplementary to the Contract.

Unless the context otherwise requires, all acronyms, abbreviations and terms used in this Appendix have the meanings given in the Contract.

A. Source of Payment. The Participant shall make payments due under the Contract from charges levied within the zone of benefit (the "Zone of Benefit") established by the Participant for the provision of water service, water storage and other services from landowners contracting with the Participant for such services (the "Participating Landowners"). Nothing in the Contract shall be construed as prohibiting the Participant from using any other funds for purposes of satisfying any provisions of this Contract.

B. Participant Charges. During each fiscal year of the Participant (the "Participant Fiscal Year"), to the fullest extent permitted by law, the Participant shall levy and collect charges in an amount equal to 110% of the amount of the Participant's Financing Obligations payable during such Participant Fiscal Year, plus all Fixed O&M and Variable O&M costs to be paid to the Sites Authority.

C. Enforcement of Landowner Agreements. The Participant shall at all times have Landowner Agreements in place with each of the Participating Landowners. The Participant covenants and agrees that the Participant shall enforce the Participant's rights under each Landowner Agreement against the respective Participating Landowners, collect amounts due in a timely manner and shall take all necessary actions, including the right to lien properties held by the Landowner, permitted by the Landowner Agreement and by law to collect in such time and amounts charges and amounts payable pursuant to the Landowner Agreements as shall permit the Participant to pay its obligations under the Contract in accordance with the terms of the Contract.

D. Notice to Sites Authority. In the event of a default of a Landowner, Participant will notify Sites Authority of such default and actions taken to remedy or mitigate such default, including the use of reserve funds to pay Sites Authority costs.

This Appendix is supplemental to the terms of the Contract, and, in the event of a conflict between the provisions of this Appendix and the provisions of the Contract, the terms of this Appendix shall govern.

Dated: _____, 2026

COLUSA COUNTY FLOOD CONTROL AND WATER CONSERVATION DISTRICT

By: _____

APPENDIX 8

INITIAL SITES OPERATIONS PLAN

[To be attached]

APPENDIX 9

ADDITIONAL TERMS FOR THE ACQUIRER AND SWP PARTICIPANTS

[Appendix 9 may contain distinct amendment procedures applicable solely to the Acquirer and SWP Participants, subject to final legal review and consistency with the Contract as a whole.]

1. Purpose of Appendix

1.1 Certain Participants are State Water Project contractors ("SWP Contractors") that are parties to State Water Project Water Supply Contracts with DWR (referred to herein plurally as "Water Supply Contracts" or singularly as "Water Supply Contract"). DWR determined that it would (i) acquire certain capacity rights in the Sites Reservoir Project, including the associated water supply, from the Sites Authority, as such acquisition is required and necessary for the purposes of the State Water Resources Development System, and (ii) offer shares in its acquired Capacity Interest and associated water supply to interested SWP Contractors to meet their needs ~~and supplement~~by augmenting their existing State Water Project supply. SWP Contractors obtaining shares of DWR's Capacity Interest from DWR are referred to herein as "SWP Participants".

1.2 DWR and the SWP Participants have executed amendments to their respective Water Supply Contracts that address the rights and responsibilities of DWR and the SWP Participants related to DWR's acquisition from the Sites Authority of capacity rights in the Sites Reservoir Project and associated water supply and deliveries of such acquired water supply to the SWP Participants, and requiring the SWP Participants to pay all DWR costs associated with such acquisition and delivery pursuant to the terms of their respective Water Supply Contracts.

1.3 This Appendix sets forth the terms and conditions for DWR's role in the Contract as the Acquirer to meet the needs of the SWP Participants and establishes certain special provisions applicable to the SWP Participants' rights, obligations, and liabilities under the Contract. The SWP Participants are a subset of signatories to the Contract, including specifically this Appendix 9, because SWP Participants have elected to participate in the Sites Reservoir Project by obtaining shares of DWR's Capacity Interest and receiving the associated water supply from DWR pursuant to the terms of their Water Supply Contracts. Upon occurrence of certain conditions set forth in paragraphs 13 and 14 of this Appendix, the SWP Participants may become subject to the uniform contractual provisions applicable to all Participants under the Contract, at the same percentage of total Sites Reservoir Project available capacity committed to herein as a shareholder in DWR's acquired

Capacity Interests, as may be modified over time consistent with this Contact and the SWP Participants' Water Supply Contracts.

1.4 Notwithstanding anything to the contrary in any other provisions of the Contract, this Appendix 9 shall apply to DWR as the Acquirer and each SWP Participant's rights, obligations and liabilities under the Contract, and to the corresponding rights, obligations and liabilities of the Sites Authority. If there is a conflict between the provisions of this Appendix 9 and any other provision of the Contract, this Appendix 9 shall prevail.

1.5 Unless defined differently herein, all acronyms, abbreviations and terms used in this Appendix 9 have the meanings given in the Contract.

2. ~~1.1~~ Election to Become a SWP Participant

2.1 By signing below, (i) each SWP Participant elects to have DWR, as the Acquirer, acquire certain capacity rights and associated water supply, as set forth in the Project Specific Information, from the Sites Reservoir Project to meet the needs of that SWP Participant pursuant to that SWP Participant's Water Supply Contract and as set forth in Section 1.3.1 of the Contract and this Appendix 9, (ii) DWR agrees to fulfill the role of the Acquirer under the Contract to meet the needs of each SWP Participant, and (iii) the Sites Authority acknowledges and agrees with the special provisions applicable to the Acquirer and SWP Participants pursuant to this Appendix 9, and further agrees to comply with the State's general terms and conditions set forth in paragraph 18 of this Appendix.

2.2 A SWP Participant shall have the right to withdraw its election to be a SWP Participant by submitting a written notice to the Acquirer and the Sites Authority, specifying the effective date of such withdrawal. Such withdrawal shall be subject to the provisions in paragraph 13 of this Appendix.

2.3 After the Effective Date of the Contract, any other Participant that is a SWP Contractor holding a Water Supply Contract with DWR may elect to become a SWP Participant by signing this Appendix, subject to the Acquirer's and the Sites Authority's written approval, and after the execution of a Water Supply Contract amendment substantially similar to the Water Supply Contract amendments described in paragraph 1.2 of this Appendix.

3. ~~2.1~~ Term

This Appendix 9 shall take effect upon the Effective Date of the Contract and shall remain in effect for as long as at least one SWP Participant retains contractual rights to a share of the Acquirer's Capacity Interest and associated water supply pursuant to this Appendix.

4. ~~2.~~ Applicability of Contract Provisions to SWP Participants

All Contract provisions applicable to a Participant or Participants shall apply to a SWP Participant, unless specifically provided otherwise in this Appendix or unless inconsistent with the provisions in this Appendix.

5. ~~3.~~ Acquirer's Capacity Interests

5.1 Notwithstanding anything to the contrary in Section 3.5 or any other provision of the Contract, the Sites Authority hereby grants to the Acquirer, and the Acquirer shall hold, in Acquirer's name, a Base Facilities Capacity Interest (referred to herein as "Acquirer's Base Facilities Capacity Interest"), for the benefit of the SWP Participants, as described in the Project Specific Information and otherwise in accordance with this Appendix. The Acquirer hereby designates shares of the Acquirer's Base Facilities Capacity Interest and associated Storage Allocation for the benefit of each SWP Participant in the amounts described in the Project Specific Information.

5.2 Notwithstanding anything to the contrary in Section 3.6 or any other provision of the Contract, the Sites Authority hereby grants to the Acquirer, and the Acquirer shall hold, in Acquirer's name, a Downstream Facilities Capacity Interest (referred to herein as "Acquirer's Downstream Facilities Capacity Interest"), for the benefit of those SWP Participants that desire to participate in funding and use of Downstream Facilities, as described in the Project Specific Information and otherwise in accordance with this Appendix. The Acquirer hereby designates shares of the Acquirer's Downstream Facilities Capacity Interest for the benefit of each SWP Participant in the amounts described in the Project Specific Information.

5.3 As applicable to each SWP Participant, any reference in the Contract, including any Appendices, to (i) a Participant's or Storage Partner's Base Facilities Capacity Interest shall mean that SWP Participant's share of the Acquirer's Base Facilities Capacity Interest, (ii) a Participant's or Storage Partner's Storage Allocation shall mean the Storage Allocation associated with that SWP Participant's share of the Acquirer's Base Facilities Capacity Interest, (iii) a Participant's or Storage Partner's Downstream Facilities Capacity Interest shall mean that SWP Participant's share of the Acquirer's Downstream Facilities Capacity Interest, (iv) a Participant's or Storage Partner's Capacity Interests shall mean that SWP Participant's share of the Acquirer's Capacity Interests, and (v) a Participant's Sites Water means that SWP Participant's share of the Acquirer's Sites Water.

6. ~~1.1~~ Leasing, Sale, Purchase, Transfer and Assignment of Capacity Interests

6.1 Subject to Section 8 of the Contract, as modified by Section 1.3 of the Contract, a SWP Participant, in coordination with the Acquirer, may negotiate a lease or sale of that SWP Participant's share of the Acquirer's Base Facilities Capacity Interest and/or Downstream Facilities Capacity Interest to another Storage Partner or non-Storage Partner; provided that where a SWP Participant proposes to lease or sell such Capacity Interest to another entity that is not a SWP Participant, the other SWP Participants shall have a "right of first refusal" with respect to the lease or sale of such Capacity Interest on

the terms provided in the Lease Offer Notice or Sale Offer Notice, as applicable, before other Participants may exercise their "right of first refusal" pursuant to Section 8 of the Contract. In the event that more than one SWP Participant wish to exercise their "right of first refusal" pursuant to this paragraph, the Capacity Interest offered for lease or sale shall be apportioned pro-rata based on these SWP Participants' shares of the Acquirer's Base Facilities Capacity Interest or Downstream Facilities Capacity Interest, as applicable, unless these SWP Participants agree otherwise.

6.2 A SWP Participant, in coordination with the Acquirer, may negotiate a lease or purchase of another Participant's Base Facilities Capacity Interest and/or Downstream Facilities Capacity Interest, pursuant to Section 8 of the Contract. Upon written request from such SWP Participant to DWR and the Sites Authority, such leased or purchased Capacity Interest shall be added to the Acquirer's Base Facilities Capacity Interest and Downstream Facilities Capacity Interest, as applicable, and shall be held by the Acquirer pursuant to the terms of this Appendix for the benefit of the leasing or purchasing SWP Participant.

6.3 Any leasing, sale or purchase of a Capacity Interests, or portions thereof, by a SWP Participant shall be coordinated with the Acquirer and shall be subject to the Acquirer's approval pursuant to the terms and conditions of the SWP Participants' respective Water Supply Contracts. A SWP Participant shall be responsible for coordination with the Acquirer, obtaining any necessary approvals from the Acquirer, and otherwise ensuring compliance with that SWP Participant's Water Supply Contract before entering into any sale, lease or purchase of a Capacity Interest pursuant to the Contract. A SWP Participant shall be responsible for providing required notices of the final lease or sale to the Sites Authority pursuant to Section 8 of the Contract, and the Sites Authority shall update the Project Specific Information accordingly upon receipt of such notice.

6.4 A SWP Participant leasing its share of the Acquirer's Base Facilities Capacity Interest and/or Downstream Facilities Capacity Interest, or a portion thereof, to another entity shall remain liable and responsible for all obligations to the Acquirer associated with such Capacity Interest under the Contract and under that SWP Participant's Water Supply Contract and shall not be relieved of any such obligations as a result of such lease. A SWP Participant selling its share of the Acquirer's Base Facilities Capacity Interest and/or Downstream Facilities Capacity Interest, or a portion thereof, shall remain liable and responsible for all obligations to the Acquirer associated with such Capacity Interests under the Contract and under that SWP Participant's Water Supply Contract and shall not be relieved of any such obligations as a result of such sale until such time as the purchaser of such Capacity Interests assumes any and all payment responsibilities and other obligations associated with such purchased Capacity Interests, as required by the Contract

7. ~~2.1~~ Allocation, Storage and Release of Water

7.1 Notwithstanding anything to the contrary in Section 4.4 or any other provision of the Contract, when the Sites Authority allocates Sites Water in Sites Reservoir to Storage Partners pursuant to Section 4.4 of the Contract, the Sites Authority shall allocate to the Acquirer the Sites Water based on the Acquirer's Base Facilities Capacity Interest up to the associated Storage Allocation. The Acquirer shall distribute its allocated Sites Water to the SWP Participants based on each SWP Participant's share of the Acquirer's Base Facilities Capacity Interest and in accordance with each SWP Participant's Water Supply Contract.

7.2 A SWP Participant may use its share of the Acquirer's Capacity Interest for the storage of its share of the Acquirer's allocated Sites Water or for storage of its Other Water pursuant to the terms of the Contract.

7.3 Each SWP Participant shall be responsible for scheduling releases of its share of the Acquirer's Sites Water or Other Water from the Sites Reservoir pursuant to the Contract, in coordination with the Acquirer. The Sites Authority shall maintain accurate records of the amount of Water released on behalf of each SWP Participant. Conveyance of released Sites Water or Other Water to the SWP Participants through the SWP Facilities shall be governed by the SWP Participants' respective Water Supply Contracts and/or other agreements with the Acquirer.

8. ~~4.~~ Sites Water Sales and Exchanges

A SWP Participant, in coordination with the Acquirer, may sell or Exchange its share of the Acquirer's Sites Water to other Storage Partners or other entities pursuant to Section 8.3 of the Contract. Any such sales or Exchanges of Sites Water by a SWP Participant shall be coordinated with the Acquirer and shall be subject to the Acquirer's approval pursuant to the terms and conditions of the SWP Participants' respective Water Supply Contracts. A SWP Participant shall be responsible for coordination with the Acquirer, obtaining any necessary approvals from the Acquirer, and otherwise ensuring compliance with its Water Supply Contract before entering into any sale or Exchange of Sites Water pursuant to the Contract.

9. ~~5.~~ Payment of Project Costs

9.1 The Acquirer agrees to pay to the Sites Authority the Project Costs under the Contract on behalf of each SWP Participant, provided that the Acquirer's financial obligations under the Contract shall be limited to and payable solely from the funding the Acquirer receives from the SWP Participants in payment of that portion of their State Water Project annual charges traceable to this Contract, as determined by DWR. Nothing in the Contract shall be interpreted as requiring the Acquirer to spend any money from any other sources in the performance of its obligations under this Contract.

9.2 As applicable to each SWP Participant, where Section 6 or any other provision of the Contract requires a Participant to make a payment of Project

Costs to the Sites Authority or describes a Participant's funding obligation under the Contract, the Acquirer shall be responsible for making the payment or providing the funding to the Sites Authority associated with each SWP Participant's share of the Acquirer's Capacity Interests. The full extent of the Acquirer's financial obligations under the Contract shall be to make such payments to the Sites Authority from the funds received from each SWP Participant pursuant to the terms of each SWP Participant's Water Supply Contract and traceable to this Contract, including this Appendix 9.

9.3 As applicable to each SWP Participant, where Section 6 or any other provision of the Contract requires the Sites Authority to make payments or disburse proceeds to a Participant, the Sites Authority shall make such payments or disburse proceeds to the Acquirer to be credited or otherwise accounted for by the Acquirer pursuant to that SWP Participant's Water Supply Contract.

9.4 When the Sites Authority provides an estimated statement of anticipated Project Costs to the Acquirer pursuant to Section 6.2 of the Contract, such statement shall specify anticipated Project Costs associated with each SWP Participant's share of the Acquirer's Capacity Interests <u>for the following two Fiscal Years, including anticipated Fixed Project Costs, Financing Obligations, Fixed O&M Costs, and Variable O&M Costs. The Sites Authority acknowledges that the Acquirer will be relying on the estimated statements of anticipated Project Costs issued under Section 6.2 of the Contract to collect sufficient funds from the SWP Participants pursuant to the terms of their respective Water Supply Contracts. If the Sites Authority becomes aware of circumstances which may result in the Project Costs exceeding the relevant amounts included in the estimated statement of anticipated Project Costs, the Sites Authority shall notify the Acquirer and the SWP Participants of such exceedance as promptly as reasonably possible</u>.

9.5 When the Sites Authority provides a Billing Statement to the Acquirer pursuant to Section 6.3 of the Contract, such Billing Statement shall identify the relevant Project Costs associated with each SWP Participant's share of the Acquirer's Capacity Interests, including Fixed Project Costs, Financing Obligations, Fixed O&M Costs, and Variable O&M Costs.

9.6 The Sites Authority shall establish individual reserve funds for each SWP Participant in the amounts agreed upon by the Sites Authority and each SWP Participant. The Sites Authority shall include each SWP Participant's agreed upon contributions to the reserve fund in: (i) estimated statements of anticipated Project Costs issued pursuant to Section 6.2 of the Contract, and (ii) Billing Statements issued pursuant to Section 6.3 of the Contract. The Sites Authority shall hold and manage each SWP Participant's reserve fund in accordance with the Sites Authority Policies. All interest and other investment earnings attributable to a SWP Participant's reserve fund shall be credited to that SWP Participant's reserve fund and shall remain available for the purposes described in this Appendix. The Sites Authority shall provide an annual report on the status of each reserve fund to the relevant SWP Participant and the Acquirer. Annual reserve fund reports shall separately

identify the beginning balance, participant contributions, investment earnings, expenditures, and ending balance.

9.7 Upon a request from a SWP Participant and after coordination with the Acquirer, the Sites Authority shall apply the affected SWP Participant's reserve fund held by the Sites Authority pursuant to Paragraph 9.6 of this Appendix to: (i) if needed, cover the difference between the amounts of Project Costs included in a Billing Statement and the relevant amounts included in an estimated statement of anticipated Project Costs issued under Section 6.2 of the Contract for the relevant billing period for the affected SWP Participant, and (ii) cover the amounts included in a supplemental Billing Statement for the affected SWP Participant issued under Section 6.11 of the Contract. If a SWP Participant's reserve fund does not have sufficient funds to cover the relevant payment obligation, the Sites Authority will apply the available reserve fund amounts in the following order: (i) Fixed Project Costs, (ii) Financing Obligations, (iii) Fixed O&M Costs, and (iv) Variable O&M Costs.

9.8 Notwithstanding anything to the contrary in Section 6.11 of the Contract, if the Sites Authority issues a supplemental Billing Statement and the affected SWP Participant's reserve fund under Paragraph 9.6 of this Appendix does not have sufficient funds to cover the total amount due under such supplemental Billing Statement, the amounts not covered by the affected SWP Participant's reserve fund shall be due and payable within 120 days after receipt of the supplemental Billing Statement by the Acquirer.

10. ~~6.~~ Communications and Sharing of Information

10.1 As applicable to the SWP Participants, where the Contract requires or allows the Sites Authority to provide a Participant with any notices, demands, reports, plans, requests, schedules, updates, forms, documents, or other communications, the Sites Authority shall provide to the Acquirer a copy of any such communication related to that SWP Participant at or around the same time as that communication is provided to the SWP Participant.

10.2 As applicable to the SWP Participants, where the Contract requires or allows a Participant to provide the Sites Authority with any notices, demands, reports, plans, requests, schedules, updates, forms, documents, or other communications, that SWP Participant shall provide to the Acquirer a copy of any such communication at or around the same time as that communication is provided to the Sites Authority.

10.3 As applicable to the SWP Participants, where the Contract provides a Participant with rights to access or inspect the Sites Owned Facilities or any records kept by the Sites Authority, the Acquirer shall have the same access and inspection rights.

11. ~~7.~~ Sites Reservoir Project Governance

11.1 The SWP Participants shall have a right to participate in the Reservoir Management Board or other Sites Reservoir Project governance to the same

extent as other Participants in accordance with the Contract, the JPA Agreement and the Sites Authority Bylaws. The SWP Participants' rights to participate in the Sites Reservoir Project governance shall be based on each SWP Participant's share of the Acquirer's Base Facilities Capacity Interest.

11.2 The Acquirer shall not be a member of the Reservoir Management Board. Nothing in this Appendix shall affect DWR's statutory authority as an ex-officio member of the Sites Authority under California Water Code Section 79759.

12. ~~8.~~ Delinquency and Default

12.1 If a SWP Participant fails to make a timely payment for Project Costs to the Acquirer pursuant to the terms of that SWP Participant's Water Supply Contract, the Acquirer may offer to the other SWP Participants an opportunity to assume all or a portion of such delinquent SWP Participant's share of the Acquirer's Capacity Interest and related obligations under the Contract, including this Appendix 9, at a price and on the terms mutually agreed between the delinquent SWP Participant and the other SWP Participant(s) willing to assume all or a portion of the delinquent SWP Participant's share of the Acquirer's Capacity Interests, and subject to Section 8.2 of the Contract.

12.2 If the Acquirer fails to make a payment to the Sites Authority when due, as described in Section 10.1.1 of the Contract, and such failure was caused by a failure of a SWP Participant to make a required payment to the Acquirer pursuant to the terms of that SWP Participant's Water Supply Contract, such failure of the Acquirer to make a payment shall not be a liability or Default of the Acquirer, but shall constitute the applicable SWP Participant's Default under Section 10.1.1 of the Contract that may only be cured by a direct payment from such SWP Participant to the Sites Authority. If the Acquirer fails to make a payment to the Sites Authority when due, as described in Section 10.1.1 of the Contract, and such failure was not caused by any action or omission by the SWP Participant, then Acquirer shall take all steps necessary to make the payment at no cost or detriment to the SWP Participant.

12.3 In the event that the Sites Authority apportions a Defaulted Interest of any Participant to the remaining non-defaulting Participants pursuant to Section 10.3.6 of the Contract, a portion of such Defaulted Interest associated with each SWP Participant's share of the Acquirer's Base Facilities Capacity Interest and Downstream Facilities Capacity Interest shall be added to the Acquirer's Capacity Interest held by the Acquirer pursuant to the terms of this Appendix for the benefit of the affected SWP Participant.

13. ~~1.1~~ Cessation of Appendix's Applicability to a SWP Participant

13.1 Upon occurrence of any of the following events and subject to the process below, this Appendix shall no longer apply to the affected SWP Participant:

a) A SWP Participant's Water Supply Contract terminates for any reason.

b) A SWP Participant submits a written notice to the Acquirer and the Sites Authority pursuant to paragraph 2.2 of this Appendix withdrawing its election to be a SWP Participant.

c) A SWP Participant fails to provide sufficient funds to the Acquirer to make payments to the Sites Authority for Project Costs under Section 6 of the Contract, which failure results in a Default under Section 10.1.1 of the Contract.

13.2 Upon occurrence of an event in paragraph 13.1 of this Appendix 9, (i) this Appendix shall no longer apply to the affected SWP Participant, (ii) such affected SWP Participant shall become subject to all provisions of the Contract applicable to Participants that are not SWP Participants, and (iii) any interests, rights or obligations held by the Acquirer for the benefit of the affected SWP Participant pursuant to the Contract, including this Appendix, shall transfer to the affected SWP Participant. The Acquirer shall provide a written notice to the Sites Authority and the SWP Participants specifying the grounds for and effective date of cessation of this Appendix's applicability to the affected SWP Participant, and the Sites Authority shall update the Project Specific Information and any other relevant records accordingly.

13.3 If a SWP Participant sells its entire share of the Acquirer's Capacity Interest to another entity, this Appendix 9 shall no longer apply to the selling SWP Participant. If the purchasing entity is a SWP Participant, the selling SWP Participant's share of the Acquirer's Capacity Interest can be included in the Acquirer's Capacity Interest upon request of such purchasing SWP Participant, as described in paragraph 6.2 of this Appendix. If the purchasing entity is not a SWP Participant, the Acquirer's Capacity Interest shall be reduced accordingly and the Acquirer shall no longer be responsible for any obligations associated with such sold share.

14. ~~9.~~ Termination of the Acquirer's Participation in the Contract

14.1 The Acquirer shall have the right to terminate its participation in the Contract if the Acquirer reasonably determines that (i) its participation in the Contract ~~causes~~or the Operations Agreement causes material adverse impacts to the State Water Project or the State Water Project contractors that are not SWP Participants; or (ii) the term and condition of the Sites Water Right prohibiting injury to SWP fails to protect the Acquirer from material adverse impacts to the State Water Project or the State Water Project contractors that are not SWP Participants. Before terminating its participation in the Contract, the Acquirer shall meet with the SWP Participants and the Sites Authority and attempt in good faith to develop measures that would avoid or mitigate the material adverse impacts to the State Water Project or the State Water Project contractors that are not SWP Participants. If there are no reasonable measures that can avoid or mitigate such material adverse impacts, as determined by the Acquirer, the Acquirer shall have the right to fully terminate its participation in the Contract.

14.2 Upon termination of the Acquirer's participation in the Contract, (i) this Appendix 9 shall terminate, (ii) the SWP Participants shall become subject to all provisions of the Contract applicable to Participants that are not SWP Participants, and (iii) any interests, rights or obligations held by the Acquirer for the benefit of the SWP Participants pursuant to the Contract, including this Appendix, shall transfer to these SWP Participants as Participants. The Acquirer shall provide a written notice to the Sites Authority and the SWP Participants specifying the grounds for and effective date of the termination of the Acquirer's participation in the Contract, and the Sites Authority shall update the Project Specific Information and any other relevant records accordingly.

15. ~~1.1~~ Liability and Indemnification

Each SWP Participant agrees to defend and hold DWR, and its officers, employees, and agents harmless from any direct or indirect loss, liability, lawsuit, cause of action, judgment or claim, and shall indemnify DWR, and its officers, employees, and agents from all lawsuits, costs, damages, judgments, attorneys' fees, and liabilities that DWR, its officers, employees, and agents incur as a result of DWR's participation in the Contract as the Acquirer, except to the extent resulting from the sole negligence or willful misconduct of DWR. The SWP Participants' liability pursuant to this paragraph shall be joint and several unless the liability arises out of an individual SWP Participant's own action or omission, in which case that SWP Participant will be solely liable.

16. ~~10.~~ Amendments of Appendix

This Appendix can be amended or modified by a written agreement of the Reservoir Management Board, the Acquirer, and at least two thirds of the SWP Participants. This Appendix may be amended or modified without the need to amend the Contract. Upon an amendment of this Appendix, the Sites Authority shall provide a copy of the amended Appendix to all Participants.

17. ~~11.~~ Dispute Resolution

Any disputes between the Acquirer and the SWP Participant(s) arising in connection with the Contract or this Appendix, and not involving the Sites Authority or other Participants, shall not be subject to the Dispute Resolution Process under the Contract, but shall be governed by the SWP Participants' respective Water Supply Contracts.

18. ~~12.~~ State General Terms and Conditions

The Sites Authority will comply with the State of California Standard Clauses set forth below.

18.1 ASSIGNMENT: This Contract is not assignable by the Sites Authority, either in whole or in part, without the consent of DWR in the form of a formal written amendment.

18.2 AUDIT: The Sites Authority agrees that DWR, the Bureau of State Audits, or their designated representative shall have the right to review and to copy any records and supporting documentation pertaining to the performance of this Contract. The Sites Authority agrees to maintain such records for possible audit for a minimum of three (3) years after final payment, unless a longer period of records retention is stipulated. The Sites Authority agrees to allow the auditor(s) access to such records during normal business hours and to allow interviews of any employees who might reasonably have information related to such records.

18.3 NON-DISCRIMINATION CLAUSE: During the performance of this Agreement, the Sites Authority and its subcontractors shall not deny the Contract's benefits to any person on the basis of race, religious creed, color, national origin, ancestry, physical disability, mental disability, medical condition, genetic information, marital status, sex, gender, gender identity, gender expression, age, sexual orientation, or military and veteran status, nor shall they discriminate unlawfully against any employee or applicant for employment because of race, religious creed, color, national origin, ancestry, physical disability, mental disability, medical condition, genetic information, marital status, sex, gender, gender identity, gender expression, age, sexual orientation, or military and veteran status. The Sites Authority shall ensure that the evaluation and treatment of employees and applicants for employment are free of such discrimination. The Sites Authority and subcontractors shall comply with the provisions of the Fair Employment and Housing Act (Gov. Code §12900 et seq.), the regulations promulgated thereunder (Cal. Code Regs., tit. 2, §11000 et seq.), and the provisions of Article 9.5, Chapter 1, Part 1, Division 3, Title 2 of the Government Code (Gov. Code §§11135-11139.5). The Sites Authority shall permit access by representatives of the Department of Fair Employment and Housing and DWR upon reasonable notice at any time during the normal business hours, but in no case less than 24 hours' notice, to such of its books, records, accounts, and all other sources of information and its facilities as said Department or DWR shall require to ascertain compliance with this clause. The Sites Authority and its subcontractors shall give written notice of their obligations under this clause to labor organizations with which they have a collective bargaining or other agreement. (See Cal. Code Regs., tit. 2, §11105.) The Sites Authority shall include the nondiscrimination and compliance provisions of this clause in all subcontracts to perform work under the Contract.

18.4 CHILD SUPPORT COMPLIANCE ACT: The Sites Authority acknowledges in accordance with Public Contract Code 7110, that:

(a) The Sites Authority recognizes the importance of child and family support obligations and shall fully comply with all applicable state and federal laws relating to child and family support enforcement, including, but not limited to, disclosure of information and compliance with earnings assignment orders, as provided in Chapter 8 (commencing with section 5200) of Part 5 of Division 9 of the Family Code; and

(b) The Sites Authority, to the best of its knowledge, is fully complying with the earnings assignment orders of all employees and is providing the names of all new employees to the New Hire Registry maintained by the California Employment Development Department.

18.5 DRUG-FREE WORKPLACE REQUIREMENTS:

The Sites Authority will comply with the requirements of the Drug-Free Workplace Act of 1990 and will provide a drug-free workplace by taking the following actions:

(a) Publish a statement notifying employees that unlawful manufacture, distribution, dispensation, possession or use of a controlled substance is prohibited and specifying actions to be taken against employees for violations.

(b) Establish a Drug-Free Awareness Program to inform employees about:(i) the dangers of drug abuse in the workplace; (ii) the person's or organization's policy of maintaining a drug-free workplace; (iii) any available counseling, rehabilitation and employee assistance programs; and, (iv) penalties that may be imposed upon employees for drug abuse violations.

(c) Every employee who works on the Contract will: (i) receive a copy of the drug-free workplace policy statement; and (ii) agree to abide by the terms of the statement as a condition of employment on the Contract.

Failure to comply with these requirements may result in suspension of payments under the Contract or termination of the Contract or both and the Sites Authority may be ineligible for award of any future State agreements if DWR determines that any of the following has occurred: the Sites Authority has made false certification, or violated the certification by failing to carry out the requirements as noted above. (Gov. Code §8350 et seq.)

18.6 CONFLICT OF INTEREST:

The Sites Authority needs to be aware of the following provisions regarding current or former state employees. If the Sites Authority has any questions on the status of any person rendering services or involved with the Contract, DWR must be contacted immediately for clarification.

(a) Current State Employees (Pub. Contract Code §10410):

1. No officer or employee shall engage in any employment, activity or enterprise from which the officer or employee receives compensation or has a financial interest and which is sponsored or funded by any state agency, unless the employment, activity or enterprise is required as a condition of regular state employment.

2. No officer or employee shall contract on his or her own behalf as an independent contractor with any state agency to provide goods or services.

(b) Former State Employees (Pub. Contract Code §10411):

1. For the two-year period from the date he or she left state employment, no former state officer or employee may enter into a contract in which he or she engaged in any of the negotiations, transactions, planning, arrangements or any part of the decision-making process relevant to the contract while employed in any capacity by any state agency.

2. For the twelve-month period from the date he or she left state employment, no former state officer or employee may enter into a contract with any state agency if he or she was employed by that state agency in a policy-making position in the same general subject area as the proposed contract within the 12-month period prior to his or her leaving state service.

If the Sites Authority violates any provisions of this Section 18.6, such action by the Sites Authority shall render this Contract void. (Pub. Contract Code §10420.) Members of boards and commissions are exempt from this Section 18.6 if they do not receive payment other than payment of each meeting of the board or commission, payment for preparatory time and payment for per diem. (Pub. Contract Code §10430 (e)).

18.7 LABOR CODE/WORKERS' COMPENSATION: The Sites Authority needs to be aware of the provisions which require every employer to be insured against liability for Workers' Compensation or to undertake self-insurance in accordance with the provisions, and the Sites Authority affirms to comply with such provisions before commencing the performance of the work of this Contract. (Labor Code Section 3700)

18.8 AMERICANS WITH DISABILITIES ACT: The Sites Authority assures the State that it complies with the Americans with Disabilities Act (ADA) of 1990, which prohibits discrimination on the basis of disability, as well as all applicable regulations and guidelines issued pursuant to the ADA. (42 U.S.C. 12101 et seq.)

18.9 AIR OR WATER POLLUTION VIOLATION: Under the State laws, the Sites Authority shall not be: (1) in violation of any order or resolution not subject to review promulgated by the State Air Resources Board or an air pollution control district; (2) subject to cease and desist order not subject to review issued pursuant to Section 13301 of the Water Code for violation of waste discharge requirements or discharge prohibitions; or (3) finally determined to be in violation of provisions of federal law relating to air or water pollution.

18.10 GENERATIVE AI DISCLOSURE OBLIGATIONS:

(a) The following terms are in addition to the defined terms and shall apply to the Contract:

"Generative AI (GenAI)" means an artificial intelligence system that can generate derived synthetic content, including text, images, video, and audio that emulates the structure and characteristics of the system's training data. (Gov. Code § 11549.64.)

(b) The Sites Authority shall immediately notify DWR in writing if it: (1) intends to provide GenAI as a deliverable under the Contract; or (2) intends to utilize GenAI, including GenAI from third parties, to complete all or a portion of any deliverable that materially impacts: (i) functionality of a State system, (ii) risk to the State, or (iii) Contract performance. For avoidance of doubt, the term "materially impacts" shall have the meaning set forth in State Administrative Manual (SAM) § 4986.2 Definitions for GenAI.

(c) Notification shall be provided to the DWR designee identified in this Contract.

(d) At the direction of DWR, the Sites Authority shall discontinue the provision to DWR of any previously unreported GenAI that results in a material impact to the functionality of a State system, risk to the State, or Contract performance, as determined by DWR.

(e) If the use of previously undisclosed GenAI is approved by DWR, then the Sites Authority will update the deliverable description, and the Parties will amend this paragraph 18.10 accordingly, which may include incorporating the GenAI special provisions, at no additional cost to the State.

(f) DWR, at its sole discretion, may consider the Sites Authority's failure to disclose or discontinue the provision or use of GenAI as described above, to constitute a material breach of Contract when such failure results in a material impact to the functionality of the State system, risk to the State, or Contract performance. DWR is entitled to seek any and all remedies available to it under law as a result of such breach, including but not limited to termination of the Contract.

SITES PROJECT AUTHORITY

By:_____
Name:
Title:
Date:

STATE OF CALIFORNIA DEPARTMENT OF WATER RESOURCES

By:_____
Name:
Title:
Date:

[INSERT SWP PARTICIPANT]

By:_____
Name:
Title:
Date:

[INSERT SWP PARTICIPANT]

By:_____
Name:
Title:
Date:

[INSERT SWP PARTICIPANT]

By:_____
Name:
Title:
Date:

[INSERT SWP PARTICIPANT]

By:_____
Name:
Title:
Date:

[INSERT SWP PARTICIPANT]

By:_____
Name:
Title:
Date:

[INSERT SWP PARTICIPANT]

By:_____
Name:
Title:
Date:

Summary report: **Litera Compare for Word 11.9.1.1 Document comparison done on 10/12/2026 2:55:46 PM**	
Style name: Same Color	
Intelligent Table Comparison: Active	
Original filename: Benefits and Obligations Contract (September 18 Board Version) (Clean).docx	
Modified filename: Benefits and Obligations Contract (Clean Draft of 10.12.26).docx	
Changes:	
Add	74
~~Delete~~	55
~~Move From~~	1
Move To	1
Table Insert	0
~~Table Delete~~	0
Table moves to	0
~~Table moves from~~	0
Embedded Graphics (Visio, ChemDraw, Images etc.)	0
Embedded Excel	0
Format changes	0
Total Changes:	131